JANEC

RESEARCH MACHINES

380Z
DISC SYSTEM

CP/M
VERSION 2·2

USERS GUIDE

PN 10915

Jane C.
RML

380Z DISC SYSTEM USERS GUIDE

PN 10915

Copyright (c) 1982 by Research Machines Limited
Printed in Great Britain

All rights reserved. Copies of this publication may be made by customers exclusively for their own use, but otherwise no part of it may be reproduced, transmitted, transcribed, stored in a retrieval system, or translated into any language or computer language without the prior written permission of Research Machines Limited, Post Office Box 75, Oxford, England OX2 0BW Tel: Oxford (0865) 249866.

The policy of Research Machines Limited is one of continuous development and improvement of its products and services, and the right is therefore reserved to revise this document or to make changes in the computer software it describes without notice. Research Machines Limited endeavour to ensure the accuracy of this document and to ensure that the products described perform correctly according to their descriptions. However, Research Machines Limited do not accept liability for the consequences of any error or omission.

Additional copies of this publication may be ordered from Research Machines Limited at the address above. Please ask for '380Z Disc System User Guide'.

PREFACE

This publication describes the facilities of the Research Machines 380Z Disc System.

This manual is divided into six chapters and contains a number of appendixes. Chapter 1 is intended for readers with little or no previous knowledge of computer systems. It gives an understanding of microcomputer systems. Chapter 2 gives a brief introduction to the 380Z Disc system. Chapter 3 describes the features of 380Z disc storage and how information is stored and retrieved using the 380Z disc storage facilities. Chapter 4 describes the physical characteristics of the keyboard, how to get started on the 380Z, and what to do if problems occur during start-up and running. Chapter 5 introduces the operating system (CP/M) facilities for accessing files on disc storage. Chapter 6 explains how to use the operating system facilities for creating system and work discs and for making back-up copies of discs.

Appendix A gives instructions on how to unpack and install the 380Z disc system. Appendix B is a glossary of some of the terms used in computing. Appendix C explains how to copy the operating system using a 380Z system with a single disc drive. Appendix D explains how to copy discs and files using a 380Z with a single disc drive. Appendix E explains how to use a television receiver as the 380Z display. Appendix F summarizes the differences between a 40-character 380Z and a Varitext (40/80 character) 380Z system. Appendix G lists the characters that can be shown on the 380Z display. Appendix H shows the keyboard layout used on earlier models of the 380Z. Appendix J explains how to create an operating system that uses the HRG facility as additional main memory.

Notice To New Users

If you are a new user and have not yet installed your 380Z, we suggest you follow this procedure:

1. Read chapters 1 and 2 of this manual.

2. Read appendix A and unpack and install your equipment.

3. Read chapters 3 and 4 to familiarize yourself with the keyboard and disc drives.

4. Read the section "Copying Discs (FASTCOPY Utility)" in chapter 6 and make security (back-up) copies of the software distribution discs supplied by Research Machines.

5. Lock your original software distribution discs in a safe place.

6. Set your new master software discs to the write-protect state (this will give you a second level of security) as explained in chapter 3.

7. You may now create discs containing both the operating system, tailored to the configuration of your 380Z, and the utilities FORMAT, PIP, and FASTCOPY by using the COPYSYS program (described in chapter 6).

8. At this point, you are now ready to use your 380Z to run programs such as BASIC, to create and read files. Read chapter 5 for information on files, file directories, the PIP (copying) program, and the CP/M file management facilities.

Syntax Notation

This manual gives a number of procedures that require you to enter commands to the system from your keyboard. These commands are shown in the form:

AAA xxx [key]

where:

AAA represents a character, literal, or keyword shown in upper case that you enter exactly as shown.

xxx represents a parameter value shown in lower case, such as a file-name, that you enter as appropriate.

[key] depicts a special key, such as the RETURN key. Note that when two keys are to be used simultaneously, these are shown in the form:

[key/key]

for example:

[CTRL/C]

One or more space characters are required between a keyword command and a parameter value unless a specific separator or delimiter, such as a colon (:) or full stop (.), is shown. The space is not required before a special key.

The syntax notation is different from that used in some other Research Machines publications.

Related Publications

Users of Research Machines BASIC, High Resolution Graphics (level 2), and TXED programs should have access to the following publications, respectively:

Extended BASIC Version 5 for Disc System and Network Station Users, PN 11006

High Resolution Graphics, Level 2, PN 11034

TXED for Disc System and Network Station Users, PN 11059

380Z Information File (for disc systems), PN 10930

Firmware Reference Manual, PN 10971

CP/M 2 Interface Guide

Acknowledgements

Proprietary software products described or mentioned in this publication include CP/M and WordStar.

CP/M is a trademark of Digital Research Inc.

WordStar is a trademark of MicroPro International Corporation.

Reader's Comments

To assist Research Machines to improve the quality of its documentation and computer software, users are invited to send any comments or suggestions to the address below.

Comments referring to documentation should include:

- a description of any errors you have found;
- comments on problems you have encountered with understanding and using the manual, and suggestions for improvement;
- your name and address and a brief description of your experience with using microcomputer systems.

Comments and queries on documentation should be sent to:

The Documentation Department
Research Machines Limited
PO Box 75
Oxford
OX2 0BW

Comments and queries referring to software errors should include:

- a written description of each step taken and each key or command you enter;
- details of the hardware configuration, and the version numbers of the software in use;
- the nature of the error.

Comments and queries on software errors should be sent to:

Technical Support Department
Research Machines Limited
PO Box 75
Oxford
OX2 0BW

CONTENTS

Preface

CHAPTER 1 INTRODUCTION TO MICROCOMPUTERS 1.1

What is a Microcomputer? 1.1
Hardware 1.1
Software 1.2
Why Micro? 1.2

CHAPTER 2 INTRODUCING THE 380Z DISC SYSTEM 2.1

380Z Software Characteristics 2.1
380Z Firmware 2.1
380Z System Software 2.2
380Z Disc System Configurations 2.2
380Z VDU Facilities 2.3
40-Character Versions 2.4
40/80 Character Versions 2.4
380Z Character Sets 2.4
Character Display and Scrolling 2.4

CHAPTER 3 DISC STORAGE 3.1

Characteristics of Discs 3.1
8-inch Disc Systems 3.1
5.25-inch Disc Systems 3.2
Disc Drive Name Convention 3.2
Logical Disc Drives 3.2
Disc Handling 3.4
Loading Discs 3.4
Unloading Discs 3.4
Disc Operation 3.5
Purchasing Discs 3.6

CHAPTER 4 GETTING STARTED 4.1

Using the Keyboard 4.1
SHIFT Key 4.2
CAPS LOCK Key 4.2
SPACE Bar and DELT Key 4.2
REPT Key 4.2
ESC Key 4.2
LINE FEED Key 4.3
RETURN Key 4.3
CTRL Key 4.3
Keyboards on Earlier 380Z Systems 4.3
Switching On 4.3
Loading the Disc Operating System 4.5
Failure to Load the Operating System 4.6
Procedure for copying CP/M Operating System Distribution Discs 4.6
Switching Off 4.6

CHAPTER 5 OPERATIONS ON FILES 5.1

Files 5.1
Filenames 5.1
File Attributes 5.2
Disc Directory 5.3
CP/M 2.2 5.3
CP/M Commands 5.4
User Numbers 5.5
USER Command 5.5
Changing the Current Disc Drive 5.5
Displaying a Disc/Directory (DIR Command) 5.5
Saving a Program File (SAVE Command) 5.7
Deleting a File (ERA Command) 5.7
Renaming a File (REN Command) 5.8
Inspecting a File (TYPE Command) 5.9
Displaying the Status of a Disc or File (STAT Command) 5.9
Copying Files (PIP Command) 5.12
Running other Programs 5.15

CHAPTER 6 OPERATIONS ON DISCS 6.1

Disc Storage 6.1
CP/M 2.2 ON 5.25-Inch Discs 6.1
Changing Discs 6.1
Disc Management Utilities 6.2
Formatting a Disc (FORMAT Program) 6.2
Checking if a Disc is Already Formatted 6.2
Using the FORMAT Program 6.2
Copying CP/M (COPYSYS program) 6.4
How to use COPYSYS 6.5
Copying Discs (FASTCOPY Utility) 6.9
Example of Using FASTCOPY 6.10
Disc Input/Output Error Messages (BDOS) 6.15

APPENDIX A INSTALLING THE 380Z A.1

Unpacking A.1
Setting Up A.2
Connecting Up A.2
Handling A.3

APPENDIX B GLOSSARY OF TERMS B.1

APPENDIX C COPYING CP/M ON A SINGLE DRIVE SYSTEM C.1

Error Recovery C.2

APPENDIX D COPYING DISCS AND FILES ON A SINGLE DRIVE SYSTEM D.1

Copying a complete Disc (CPYDSK Program) D.1
Copying a file (CPYFIL Program) D.2
Error Recovery D.3

APPENDIX E USE OF A TELEVISION AS THE SYSTEM DISPLAY E.1

Connecting Up E.1
Tuning In E.1

APPENDIX F 40-CHARACTER SYSTEMS : DIFFERENCES F.1

Use of Cassette Recorder F.1
Use of Television F.1
Character Set and Display Handling Facilities F.1

APPENDIX G 380Z MONITOR CHARACTER SETS G.1

40-Character Systems G.1
80-Character Systems G.1

APPENDIX H EARLIER KEYBOARD LAYOUTS H.1

APPENDIX I SUMMARY OF MAIN DIFFERENCES BETWEEN CP/M 2.2 AND CP/M 1.4 I.1

APPENDIX J USE OF HRG AS SYSTEM MEMORY J.1

APPENDIX K AVAILABLE SOFTWARE IN CP/M 2.2 K.1

Applications Software K.1
Research Machines Extended BASIC K.1
Research Machines TXED - Interactive Text Editor and Formatter K.1
Research Machines ZASM Z80 Assembler K.2
Microsoft FORTRAN 80 K.3
CBASIC K.3
Research Machines ALGOL 60 K.3
CIS COBOL K.4

CHAPTER 1

INTRODUCTION TO MICROCOMPUTERS

This chapter introduces the basic concepts of microcomputer systems to users with little or no previous knowledge of computer systems.

WHAT IS A MICROCOMPUTER?

A microcomputer is an electronic machine which processes information rapidly. A microcomputer cannot think for itself; it can only do exactly what it is instructed to do by computer programs.

The term microcomputer system generally refers to a number of separate elements which work together to achieve a required result. These elements can be thought of in two main groups; the electronic machines, called hardware, and the computer programs, called software.

HARDWARE

A typical microcomputer system consists of:

A keyboard.
A visual display unit.
A processor.
An internal memory.
An external storage device.
A printer.

The keyboard lets you communicate with the processor.

The visual display unit lets you see what you have told the system to do, and what messages the system has sent to you. These messages may include any other information previously stored in the computer system.

The processor, as the name suggests, processes your information as instructed by a computer program. The processor includes a microprocessor, sometimes called "The Silicon Chip". The microprocessor executes programs to perform arithmetical and logical operations on information stored in the computer's memory.

This memory is mainly 'volatile'; volatile memory can be modified by a program during processing, but when the system is turned off the contents of this memory are lost. Each time the system is turned on the program and the information must be reloaded from a 'non-volatile' storage device.

The internal memory also includes read-only memory which is non-volatile the contents of which are not lost when the system is turned off. This memory has special uses within the system.

 Copyright November 1982

The external storage device is usually a form of magnetic storage. Magnetic tape (cassettes) and magnetic discs are used. The processes involved are similar to those of a tape recorder, and are discussed more fully in Chapter 3.

Finally, you will often need a printed copy of the results of the work performed by the computer. This is provided by the printer. The copy is called a listing.

SOFTWARE

Software really means computer programs. A program is a sequence of instructions. There are two types of software:

System software.
Applications software.

System software is a set of programs supplied by the computer system manufacturer. Without these programs, it is an extremely laborious process to write programs for the system. The system software helps to make the computer easier to program and use. The operating system is an example of system software. Another example is the system software routines that are held permanently in the computer's non-volatile (read-only) memory. This type of software is frequently referred to as firmware.

Applications software is a set of programs which you may use to solve your specific information and data processing problems. These programs are designed to take care of the most commonly-used applications. This saves a lot of time for many users. For example, this manual has been prepared using a word processing application program, called WordStar*, that is available for use on many different microcomputer systems.

WHY 'MICRO'?

Computers vary according to their size, complexity, and cost. Microcomputer is the name given to the smallest of the general purpose computers that are widely used in industry, education, administration, and, increasingly, the home. Microcomputers possess many of the features of the larger, more complex, and more expensive computers. However, microcomputers are assembled in small cabinets that are easily transported. They fit easily into the existing office, laboratory, classroom, and home, use a small amount of power, and cost substantially less than larger systems.

The most significant differences between a microcomputer and its larger cousins are its much smaller capacity for storing information and, usually, a lower speed for processing this information. In most other respects they provide the same facilities.

* WordStar is a registered trademark of MicroPro. Inc.

CHAPTER 2

INTRODUCING THE 380Z DISC SYSTEM

380Z SOFTWARE CHARACTERISTICS

Each 380Z disc system is supplied with software. The software is organized at various levels. The first level contains the software routines that are stored permanently in every 380Z's read-only storage (ROM). This level of software is frequently referred to as firmware. This is because it cannot be changed without physically modifying the system. The next level of software is a set of routines maintained on a special disc, known as the system disc. Some of the software routines held on the system disc are loaded into the computer's memory at the start of each working session. The others are loaded only when needed. This level of software is frequently referred to as system software. The highest level of software includes the programming language facilities and general-purpose application packages. They are supplied by Research Machines and other suppliers according to the requirements of individual users. This level of software is supplied independently of the firmware and system software and is described in separate manuals. Firmware and system software is introduced briefly below.

380Z FIRMWARE

Each 380Z is delivered with a set of firmware programs permanently stored in its ROM. Firmware controls the internal operation of the 380Z hardware and is identified as COS (the Cassette Operating System). There are different versions of COS on different 380Z systems. (The differences reflect the evolution of the 380Z from a cassette-based system to the disc based systems described in this manual).

COS performs the following tasks:

- interprets and obeys commands entered from the keyboard by the user
- controls the operation of the peripheral devices (keyboard, visual display, disc drives, and printer)
- provides a variety of features to support the development and maintenance of programs at a low level known as machine code
- provides various internal service functions, such as memory management, which are not visible to the user
- initiates the loading of an operating system for disc storage.

The 380Z firmware is loaded and activated whenever you switch the 380Z on or whenever you press the 380Z RESET button.

 Copyright November 1982

380Z SYSTEM SOFTWARE

The 380Z disc system is used under the control of system software supplied by Research Machines. This system software is based on the CP/M (Control Program for Microcomputers) operating system, a product developed by Digital Research Inc for use on a wide range of microcomputer systems. The CP/M facilities described in this manual relate to version 2.2 of this product.

The main functions of CP/M are:

- Supervise the loading and execution of user's programs and application programs
- to provide a set of facilities for disc and file management
- to handle the transfer of data between a user's program and disc storage and other I/O devices
- to manage the use of space on disc files for programs and data files.

380Z DISC SYSTEM CONFIGURATIONS

The 380Z disc system exists in a variety of different configurations. The configuration of the 380Z depends on a number of factors, including the following:

- the date the 380Z was delivered (type of disc drive, version of COS, etc.)
- whether it is a 40-character system or a 40/80 (Varitext) system
- whether it has one or two 5.25-inch disc drives or two 8-inch disc drives, and the type of the disc drive used
- whether it is to be used as a Network system server, or a stand-alone system
- whether it has a high resolution graphics capability.

The 380Z can have many combinations of these possibilities, and you are advised to make sure that you are aware of your 380Z's configuration in order to avoid confusion arising when you read the operating instructions for the equipment. Table 2.1 gives a list of the combinations of 380Z features that can be found in most configurations.

 Copyright November 1982

Table 2.1. 380Z Configurations

380Z Feature	40 character	40/80 (Varitext)
5.25-inch Discs:		
Mini-disc system - 1 drive (MDS-1):		
horizontal drive	Y	Y
vertical drive	Y	Y
Mini-disc system - 2 drives (MDS-2):		
vertical drives	Y	Y
horizontal drives	Y	Y
8-inch Discs:		
Floppy-disc system - 2 drives (FDS-2)		
Hitachi drives (white front - black doors)	Y	Y
BASF drives (black front - grey release latches)	Y	Y
Network System Server:		
5.25-inch discs (MDS-2)	Y	Y
8-inch discs (FDS-2)	Y	Y
Monitor	Y	Y
TV as VDU	Y	Special Interface required

The differences between the various types of disc unit are detailed in subsequent chapters. The differences between 40 character and 40/80 Varitext systems are also detailed in subsequent chapters.

380Z VDU FACILITIES

The 380Z is available with VDU facilities in two versions:

- 40 character version
- 40/80 character version (Varitext).

 Copyright November 1982

40-character Version

The display of the 40-character version of the 380Z is presented in the form of 24 rows of 40 characters. Each character position can display one of 256 characters covering the ASCII and viewdata/teletext character sets. A table of the characters generated is given in Appendix G.

40/80 Character (Varitext) Version

On a Varitext system, the display can be presented in two forms, either as 24 rows of 40 characters or as 24 rows of 80 characters. Each character position can display one of 256 characters normally covering the ASCII and viewdata/teletext character sets. Using a feature built into COS, the user can, if necessary, redefine some or all of the teletext (low resolution graphics) characters to suit particular applications.

380Z Character Sets

Only the ASCII character set is available directly from the keyboard. With certain exceptions, the character displayed when a key is pressed corresponds to the character inscribed on the key. The display cursor indicates the point on the display where the input character will appear.

Character Display and Scrolling

As each character is displayed on the VDU the cursor moves one position to the right unless it is at the right-hand end of a line in which case it moves to the start of the next line. As lines of input are entered, it is "scrolled" up the screen so that the line being entered is normally at the bottom of the screen.

When displaying output from an executing program, the display is normally produced screen by screen. This mode of operation is called page mode, which means that when a complete page has been sent to the display, scrolling of output is suspended to enable the user time to read it. The end of a page is marked by a flashing cursor in the bottom left-hand corner of the display. By pressing the space bar when the cursor is flashing at the bottom of a page, you will allow scrolling to continue so that a further page of output can be displayed.

Page mode can be suspended and resumed by pressing the key CTRL and the character 'A' together. When page mode is suspended, the display is produced in scroll mode as a continuous stream of text from the start to the end. In 380Z systems with COS 4.0 and later, the display has two modes of operation: normal and smooth. Normal display is somewhat jerky and difficult to read while smooth display is less jerky and easier to read. Smooth display can be obtained and suspended by alternately pressing the key CTRL and the character '@' together while the 380Z is in either page mode or scroll mode.

 Copyright November 1982

CHAPTER 3

DISC STORAGE

Your 380Z disc system is equipped with disc storage in order to allow you fast storage and retrieval of large volumes of information files and programs.

To make it easy for you to use your disc system, Research Machines supplies each 380Z disc system with a disc containing a set of software programs, known collectively as the CP/M operating system. CP/M provides many facilities for helping you to read and write files of information to and from discs, and to create, copy, modify, print, and delete them. CP/M is introduced in the next chapter.

Before attempting to use CP/M you should familiarize yourself with discs and disc drives. The following paragraphs describe the main characteristics of the disc drives to be found on 380Z systems and the discs that are used.

CHARACTERISTICS OF DISCS

The discs used are made of flexible plastic coated with a magnetic oxide. The disc is rotated at speed inside a cover, which serves to support and protect it. The disc is inserted into the disc drive when the information it contains is required and can be removed when this information is no longer required. Read/write heads in the disc drive can read information from the disc or write information onto it in the same way that information can be read from or written to a magnetic recording tape. Information is recorded along concentric circles on the disc, called tracks, each of which is divided into a number of sectors. Each sector contains a block of data. The disc is provided with a write-protect notch. The presence of an opaque paper sticker covering this notch determines whether or not the drive mechanism is able to write information onto the disc. (This function differs between 5.25-inch and 8-inch discs). All the information which the computer needs can be preserved on this medium including both programs and data, and once information is written onto a disc it remains there until it is erased, replaced, or overwritten by new data.

8-inch Disc Systems

The Research Machines 380Z Disc System with 8-inch disc drives uses either single or double-sided "soft sectored" discs. Each side of a disc has 77 tracks, each with 26 sectors and each sector can store 128 bytes. The first two tracks are reserved for the disc operating system and 16 sectors of the third track holds the file directory so that 241K bytes of programs and data can be stored on each side.

Write Protection: 8-inch discs are normally provided with a WRITE-PROTECT NOTCH on the left-hand edge of the disc packet. If a self-adhesive label or piece of opaque tape does not cover this notch, then the system will refuse attempts to write files onto the disc or to modify or erase files already on the disc. If an attempt is made to write a file onto or erase a

file from a "write-protected" disc then the message:

```
BIOS - Disc Write Protected
Disc Err on d:   Bad Sector
```

will be displayed.

5.25-inch Disc Systems

The Research Machines 380Z Disc System with 5.25-inch disc drives uses either single-sided or double-sided "soft sectored" discs. Each side of a disc has 40 tracks, each with 16 sectors and each sector can store 128 bytes. The first three tracks are reserved for the disc operating system the fourth track contains the file directory. This leaves 72K bytes of storage for files and programs on each side.

Write Protection: 5.25-inch discs are normally provided with a write-protect notch on the left-hand edge of the disc packet. If a self-adhesive label or piece of opaque tape covers this notch, the system will refuse attempts to write files onto the disc or to modify or erase files already on the disc. If an attempt is made either to write a file onto a write-protected disc or to modify or erase a file from such a disc, a message such as:

```
BIOS - Disc Write Protected

Disc Err on d:   Bad Sector
```

will be displayed.

DISC DRIVE NAMING CONVENTION

Each disc drive in a 380Z disc system can either read one side of a disc (single-sided) or both sides of a disc (double-sided). You should check whether your drives are 5.25-inch or 8-inch and double-sided or single-sided. Each side of a disc drive that is operational is referred to individually as a "logical disc drive" and is given one of the names A, B, C, or D.

Drives A and C represent the two sides of the first disc drive, which is always present on a 380Z Disc System, while drives B and D represent the two sides of the second disc drive (Not all 380Z disc systems are equipped with a second disc drive.) Note that only drives A and C are present in a single-disc (double-sided) disc system while only drives A and B are present in a double-disc (single-sided) disc system.

Logical Disc Drives

By now you should know whether your system has 5.25-inch disc drives (always housed in the central processor cabinet) or 8-inch disc drives (housed in a separate cabinet). You should now identify logical disc drives A, B, C, and D according to the configuration of your disc system.

These configurations of logical disc drives are shown in table 3.1.

Table 3.1 Logical Disc Drive Configurations

5.25-INCH DISC DRIVES	
Vertical Single Sided	
Vertical Double Sided	
Horizontal Double Sided	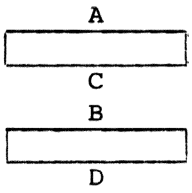

8-INCH DISC DRIVES	
Hitachi (white with black buttons)	
BASF (black with grey buttons)	

The term "logical disc drive" is used in order to permit different variants of the CP/M operating system to be used on a wide range of disc-based microcomputer systems. When CP/M is running you will see and use the logical name of the disc drive to identify the disc it contains and which you wish to access. The disc itself does not have any name, and you will be responsible for making sure that you have inserted the correct disc in the correct drive whenever you are using the 380Z.

DISC HANDLING

- Always replace the discs in their protective envelopes immediately after they are removed from the drives
- Keep your discs in a box
- When you handle a disc, take care not to touch the exposed parts of the disc surface
- Do not bend discs
- Keep discs free from dirt and grease
- Store your discs well away from magnetic fields
- Keep discs away from cigarette smoke and ash

Loading Discs

Before you attempt to load a disc into a drive, always check that the system is switched on. If the drive is 8-inch, make sure that the disc drive unit too, is switched on. Proceed as follows:

1. Remove the disc from its envelope but do not attempt to remove it from its protective sleeve. Do not touch the surface of the disc showing through the slots in the sleeve, as this will possibly cause the information recorded on it to be destroyed.
2. Insert the disc into the drive, holding it with the maker's label on the same side as the disc drive door and the edge with the "write-protect" notch either leading (8-inch discs), or on the lower edge (5.25-inch vertical drives), or on the left-hand edge (5.25-inch) horizontal drives.
3. Push the disc into the drive as far as it will go. It will lock into position when this point is reached. You should then close the disc drive door by pushing it until it locks in the closed position.
4. Some disc drives provide a locking catch which you can slide over the "locked" position. This will prevent the drive door opening during an operation.

Unloading Discs

Never switch the system (or the disc drive, if 8-inch) off before removing any discs it contains, otherwise you may damage your discs. Proceed as follows:

1. Release the locking catch, if present on your equipment and used.
2. Release the door: this action varies according to the equipment:

 Copyright November 1982

5.25-inch drives:

Vertical	Press the notched section in the centre of the door until it releases itself.
Horizontal	Lift the door flap.

8-inch drives:

Hitachi (white with black buttons)	Press black button until door is freed.
BASF (black with with grey buttons)	Press grey button until door is freed.

3. Remove the disc.

4. Do not attempt to close the door.

DISC OPERATION

Whenever information is being read from or written to a disc, the red light by the disc drive door is illuminated and the drive mechanism produces some audible clicks and whirrs.

The following summarizes aspects of disc handling:

- Make sure you purchase the correct discs for your system (See PURCHASING DISCS below.)
- Always check that there are no discs in the drives when you switch the system on and off. Failure to remove the discs from the drives before switching the system or drives off (or inserting the discs into the drives before switching on) may lead to the discs being damaged and some of the information on them being destroyed.
- The procedure for switching-on is described in chapter 4, under "SWITCHING ON".
- Ensure that you only insert one disc into a drive.
- It is important that the disc is fully inserted into the drive. It is sensible to get into the habit of inserting the disc and then applying gentle pressure to the edge of the disc to ensure that the disc is fully home before closing the door

PURCHASING DISCS

It is essential that you only purchase discs from one of the manufacturers currently recommended by Research Machines Limited. In our experience only a few manufacturers have so far demonstrated the ability to manufacture discs which are satisfactory for use in the double-sided drives used with our 380Z Disc System. If you use a disc of inferior quality, you run the risk of some of the oxide coating on the disc transferring itself onto the read/write heads in the disc drive. If this happens, the heads will be seriously damaged and will have to be returned to our factory for repairs.

When purchasing discs, please note:

1. The 380Z Disc System uses either 5.25-inch or 8-inch soft sectored, single-sided or double-sided discs.

2. The Research Machines Limited warranty for the 380Z Disc System does not cover damage to disc drives caused by the use of discs from a non- recommended manufacturer.

3. The list of recommended manufacturers as of January 1982 is:

   Research Machines
   Maxell
   IBM
   Dysan

   This list is reviewed annually and some manufacturers may leave the list and others may join it.

4. Make sure that the 5.25-inch discs that you purchase are 40-track discs, not 35-track discs. The use of 35-track discs is likely to result in damage to your disc drives.

 Copyright November 1982

CHAPTER 4

GETTING STARTED

This chapter explains how to:

- use the keyboard
- adjust the monitor
- switch the 380Z system on and off.

USING THE KEYBOARD

The keyboard and visual display (video monitor) together provide the basis for communicating with the system. In order to get the best from your system you must be familiar with the use of the facilities provided by these devices.

The keyboard provided with your 380Z Disc System is similar to a normal typewriter keyboard both in the range of characters provided and in its layout.

In addition to the keys usually found on a typewriter, the 380Z has some additional keys (control keys) which have special functions for use with the 380Z.

In most circumstances, when you press an alphabetic, numeric, or symbol key, it will appear on the screen of the VDU, displacing the cursor to the next position to the right.

The layout of the 380Z keyboard is shown in figure 4.1.

Some of the 380Z keyboard control keys are described below.

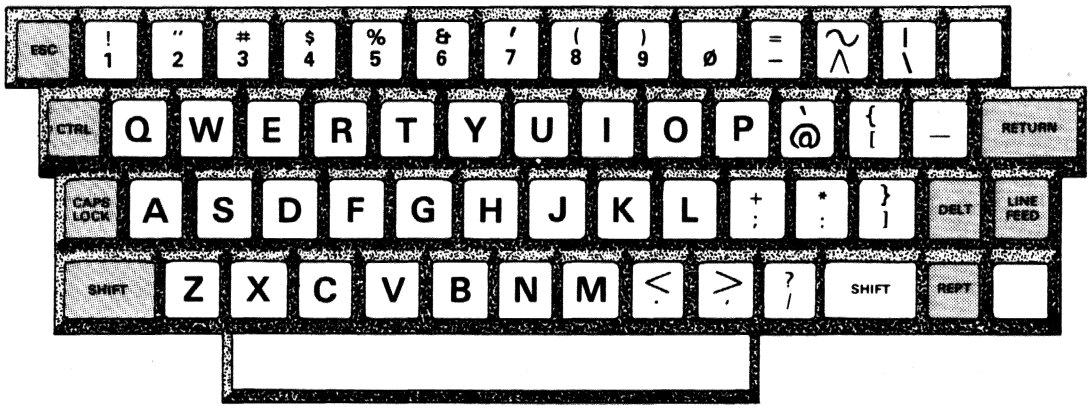

Figure 4.1. 380Z Keyboard

 Copyright November 1982

SHIFT Key

The SHIFT key permits most of the other keys to represent two separate characters:

- a lower-case or an upper-case alphabetic character for all the alphabetic keys
- either the lower or upper character engraved on a non-alphabetic key, such as a digit or a symbol.

The shift key must be pressed down when striking another key in order to use its upper case. The CAPS LOCK key can also be used to obtain all alphabetic characters in upper case. See below.

CAPS LOCK Key

The CAPS LOCK key is similar to the CAPS LOCK key on a typewriter except that it applies only to the alphabetic character keys. Press the CAPS LOCK key and all alphabetic will be transmitted to the 380Z in uppercase. Press it again and the alphabetic characters are transmitted in lowercase. The CAPS LOCK key has no effect on non-alphabetic keys which will always transmit the lower character engraved on it unless the SHIFT key is also held down when it is pressed.

SPACE Bar and DELT

These keys allow you to alter the position of the cursor on the screen. Pressing the SPACE BAR generates a blank character, which has the effect of moving the cursor one position to the right, unless the cursor is already at the right-hand end of a line in which case it advances the cursor to the left-hand end of the next line.

Pressing the DELT key moves the cursor one position to the left, deleting the character to the left of the cursor, except when the cursor is already at the left-hand end of a line, in which case it has no effect on the display.

REPT Key

Hold the REPT key down and it will generate copies of the last character typed. For example, press A and then hold down the REPT key (or press A while holding down the REPT key) and you will produce a series of the letter A.

ESC Key

This key can perform specific functions according to the program being used.

LINE FEED Key

Pressing this key has the effect of moving the cursor vertically down the

screen to the line below. However, the action of this key depends on the program being used, and may be different to this.

RETURN Key

The RETURN key has the effect of transferring a line of text you have just keyed in to the central processor and returning the cursor to the beginning of the next line of the screen.

The RETURN key is used in particular to transmit commands consisting of more than one character as well as lines of text, according to the programs that you are using. However, the action of this key depends on the program being used, and may be different to this.

CTRL Key

The CTRL key is used by pressing and holding it down and then pressing an alphabetic key. The function performed depends on the program you are running and the alphabetic key you press together with the CTRL key. You should check the uses of the CTRL key when you run programs that use them.

Keyboards on Earlier 380Z Systems

If you are using an early 380Z system, you may find that your keyboard has some minor differences compared with the current 380Z keyboard.

The earlier 380Z keyboard is described in appendix H.

NEC Monitor Controls

The NEC monitor supplied by Research Machines has two additional controls on its rear cover. These controls should be checked if your display is not sufficiently clear or bright. These are the HIGH/75-ohm switch and the SUB-BRIGHT control (actuated by a small screwdriver).

The HIGH/75-ohm switch should be set to HIGH when using a chain or series of monitors connected to the same 380Z. The 75-ohm setting should be used when using a single monitor, or if it is the last in a series of monitors.

The SUB-BRIGHT control can increase or decrease the level of brightness independently of the BRIGHT control on the front of the monitor. This means that if the BRIGHT control does not produce a sufficiently bright picture at its full setting, you can increase the maximum brightness by adjusting the SUB-BRIGHT control.

SWITCHING ON

If the system is not already installed and connected, follow the instructions given in appendix A.

1. Before turning on the mains supply make sure that the power switch on each piece of equipment is set to OFF.

 Copyright November 1982

2. Plug in the mains extension lead or adaptor and switch on the mains supply.

3. Insert the key into the lock (if not already present) on the processor and turn it clockwise to the ON position.

4. Switch on the video monitor or TV receiver and allow a few seconds for it to warm up. To make the display on your monitor or TV as clear as possible you may need to adjust the brightness and contrast controls. To obtain a screen full of information in order to be able to make any necessary adjustments, press the keys CTRL and F. This will display the 380Z "front panel". (Press 'K' and RETURN to leave the front panel. The use of the front panel is not described in this manual. Refer to the Firmware Reference Manual for further information).

   Note that, in addition to the brightness and contrast controls, a monitor also has controls for adjusting the horizontal and vertical holds. These controls should be used to stop the display from moving from left to right and producing black and white lines on the screen (horizontal hold) and from rolling vertically (vertical hold). These controls are operated in the same way as the corresponding controls on a domestic television set.

5. If you have an 8-inch disc unit, you must switch it on; the switch is at the top left when viewed from the rear of the disc drive unit, and is on when pointing upwards. When this disc drive unit is switched on, the fan at the rear of the unit will start and a red lamp at the front of the unit should light up.

When the processor is turned on a lamp inside the reset button should light up, the fan (if fitted) should start, and a message identifying the version of COS present in the system's ROM will appear at the bottom left hand corner of the screen. For example:

```
COS 4.0A/F
→
```

identifies the system as using version 4.0A/F of COS.

The symbol "→" is the COS operating system prompt. It is displayed whenever the 380Z is running under the control of COS and is waiting for you to enter a COS command.

If you have a 40/80 character (Varitext) system it will start up in 80-character mode. Press the "W" key on the keyboard if you intend to use the system in 40-character mode.

Some of the commands you can use by pressing the appropriate key on the keyboard are:

B load disc operating system from drive A (first physical disc drive)

X Reassign logical disc drive A to the second physical disc drive (and vice-versa), and load the disc operating system from the second-drive.

Jnnn jump to address nnn and execute Machine Code program (used for starting or restarting programs)

M enable high resolution graphics board as memory. See appendix J for details.

O select printer option

W switch screen width (Varitext systems only) to 40 or 80 characters

All COS commands may be given in the form of either upper or lower case letters.

Note that if you press the RESET button, the system is "reinitialized". The system will then wait for you to enter a COS command. Note also that the processor lock has three positions - OFF, ON and LOCK. If the key is turned to the LOCK position, the RESET button becomes disabled - use this setting if you want to avoid accidentally reinitializing the system before a program that is being executed has finished.

LOADING THE DISC OPERATING SYSTEM

The disc operating system CP/M can be loaded as soon as the system has been switched on and the system disc has been inserted into a disc drive.

- If you have inserted the system disc into the lefthand (or top) drive, type the letter 'B' on the keyboard.
- If you have inserted the system disc into the righthand (or bottom) drive, type the letter 'X' on the keyboard.

The letter you type will appear after the '→' character on the display screen and the 380Z will load the operating system from the disc.

When the operating system has been loaded, you will see the CP/M 2.2 start up message displayed on the screen; for example:

```
Research Machines
Release x.x
56K CP/M Vers 2.2C

A>
```

This indicates that the operating system has been loaded from the disc in logical disc drive A. The line "A>" indicates that the current logical disc drive is drive A and that the operating system is waiting for you to enter a CP/M command or the name of a program to be executed.

Failure to Load the Operating System

If the system does not succeed in producing the above display, but gives a message, such as:

```
Disc not ready
Bad Sector
Boot.Err
```

or gives no message, but displays the COS prompt → again, check that you are using the correct disc, that the disc is in the correct drive, that it has been put in the right way round, and does in fact contain a copy of CP/M.

PROCEDURE FOR COPYING CP/M OPERATING SYSTEM DISTRIBUTION DISCS

If your 380Z is new or a new version of the CP/M operating system is to be used for the first time, it is important that you make copies of all discs supplied by Research Machines and work only from these copies. This is to avoid accidentally destroying some or all of the operating system programs that are supplied on the distribution discs. To do this:

1. Make one or more copies of the distribution system disc using the FASTCOPY program as described in chapter 6 if you have a dual-drive system, and then store the distribution disc in a safe place.

2. Create as many copies of a working system disc using COPYSYS and FASTCOPY (described in chapter 6) as needed. A working system disc created by the COPYSYS program will contain only those operating system facilities needed for day-to-day use and so leave plenty of space for your programs and files. These facilities are the operating system program itself, the PIP program (described in chapter 5), and the STAT, FASTCOPY, and FORMAT programs (all described in chapter 6).

3. Format as many blank discs as needed as data discs using FORMAT as described in chapter 6.

4. Transfer any files on to your data discs or working system discs using PIP as described in chapter 5.

5. Refer to appendix J if you wish to use the HRG facility, if fitted, as additional memory for a 32K 380Z.

You are now ready to begin using your 380Z system.

SWITCHING OFF

The 380Z can be switched off whenever required, but make sure that none of the disc drives contains a disc. Damage can occur if the machine is switched off with a disc left in a drive.

 Copyright November 1982

CHAPTER 5

OPERATIONS ON FILES

On the Research Machines 380Z, both the programs that are used and the data that is held must be stored within files on a disc. This chapter introduces you to 380Z disc files and describes the CP/M commands that are available to help you control your disc files, so that you can:

- find the information you need when you need it,
- create backup security copies of all your important files.

Before reading this chapter, ensure that you are familiar with the procedures for switching your system on and off, and for loading the CP/M operating system (see Chapter 4).

FILES

When programs and information are permanently stored on disc they are called files. Each new file must have a different filename. If you create a file with a filename that already exists, the first file will be overwritten and lost. The rules for filenames for 380Z disc files are described below.

Filenames

The filename consists of three parts: optionally, the logical disc drive on which the file resides, a primary filename, and an optional extension filename. The primary and extension filenames must be separated by a full-stop character ".". There must be no spaces in the file name. In this manual, filenames are represented as:

```
d:name.ext
```

where:

d identifies the logical disc drive. If omitted, the current logical disc drive is assumed to contain the disc on which the file is stored.

: indicates that the previous character is a logical disc drive name. Must be omitted if "d" not present.

name is the primary filename. Consists of up to eight alphanumeric characters and/or $ symbols in sequence. The primary filename must not contain any spaces

. Separates the primary filename from the extension file name. If the extension file name is not given, the "." may be omitted. There must not be any spaces on either side of the fullstop character.

ext is the extension filename. Consists of three alphanumeric characters and/or $ symbols in sequence. Must not contain spaces. Is optional and is used conventionally to indicate the file's type.

 Copyright November 1982

Certain files are required to have specific extension filenames. For example, files containing BASIC programs must have BAS as the extension filename and machine-language programs must have the extension filename COM.

An example of a filename is:

A:STAT.COM

where:

A:	identifies the logical disc drive as drive A
STAT	is the primary filename
COM	is the extension filename

Quite often, when you want to refer to several or all of the files on the same disc surface at the same time, for example, when using the STAT command, which is described later, you can use the filename-match (or 'wild card') facility.

A filename-match is a group of characters used to refer to several files at the same time. Two special characters are used in the filename match: "*" and "?".

The character "*" is used to replace some or all of the characters in a primary filename, an extension filename, or both, (but not the logical disc drive name) as follows:

*.ext	denotes all files on the current disc drive with your user number and with the same extension name, where "ext" represents the extension name. Note that user numbers are described below
name.*	denotes all files on the current disc drive with your user number and with the same primary filename, where "name" represents the primary file name
.	denotes all files on the current disc drive with your user number
F*.C*	denotes all files with a primary file name starting with the letter "F" and an extension filename starting with the letter "C".

The character "?" is called a 'wild character'. It replaces any individual characters in the primary or extension filename (but not the logical disc drive name), and will match any character in that position. For example:

F??.*	denotes all files on the current disc drive with your user number and with a primary file name of up to three characters starting with the letter "F".
*.W??	denotes all files on the current disc drive with your user number and with an extension filename of up to three characters starting with the letter "W".

File Attributes

In CP/M 2.2, each file is given attributes that affect whether the file can be modified or not and whether its name will or will not appear in a

directory listing. These attributes are called the access attribute and the disclosure attribute.

The access attribute has two possible settings: R/W (read/write) to permit a file to be created, read, extended, modified, or deleted, and R/O (read-only) to permit a file only to be read and to protect it from modification or deletion.

The disclosure attribute has two possible settings: DIR to allow the name of a file to appear in the display of the disc directory produced by the DIR command (described below) and SYS to prevent the name of a file from appearing in the display of the disc directory.

A file can have its attributes altered by using the STAT command, described later in this chapter.

DISC DIRECTORY

The directory is a special area present on each disc and contains information about each file, including:

Its name.
Its physical location on the disc.
Its size.
Other attributes, to be described later.

The DIR and STAT commands, described later in this chapter, can be used to display information contained in the disc directory.

Backup Copies of Discs

The importance of making and maintaining backup copies of all your essential files cannot be emphasized too strongly. A file that took weeks to enter could accidentally be lost in a fraction of a second. It is far better to spend a few minutes copying each file at the end of the day than it is to be forced to re-enter an entire file. This is particularly important for files obtained from external sources when it may not be possible for you to recreate the information.

CP/M 2.2

CP/M 2.2 is the standard operating system for your 380Z processor. It communicates with you, and you to it, and if possible, performs your commands.

It is a common experience that the simplest, and best, way to learn about CP/M is to use its facilities. But before using CP/M let us summarize what it is and what it does.

When your 380Z processor is turned on and the "bootstrap" command is entered, CP/M is read from permanent storage on the system disc into the 380Z's internal memory, where it starts monitoring the keyboard for commands.

You are then able to enter into a dialogue with CP/M and choose the program you want to use, for example BASIC. When you have finished using the program, CP/M takes over again and waits for your next command. This interchange continues until you either turn your 380Z off or press the RESET button.

CP/M has other features which allow you to perform file management. For example, it provides commands for creating and deleting files.

CP/M COMMANDS

When CP/M is loaded into the 380Z's internal memory, you communicate with it using either built-in or transient commands. The built-in commands are immediately available for use. Associated with CP/M are a number of transient commands. These are stored on disc as files. A transient command only works if there is a corresponding file with a .COM extension filename on one of the discs being used. When you want to use one of these transient commands, CP/M must load it into the 380Z for you.

In this chapter we discuss the most commonly-used built-in and transient CP/M commands.

The CP/M commands listed in table 5-1 are described below. Note that if you make an error in typing a CP/M command keyword, the erroneous keyword is displayed followed by a question mark. If you make an error in typing in a file-name or any other parameter used with a CP/M command, the text containing the error is sometimes (but not always) displayed followed by a question mark.

Table 5-1. CP/M Commands and their Functions

Command Keyword	Function
Built-in Commands	
USER	Changes the user number
d:	Changes the current disc drive
DIR	Displays a summary of a disc's file directory
SAVE	Creates a file
ERA	Deletes a file
REN	Renames a file
TYPE	Displays the contents of a text file
Transient Commands	
STAT	Displays the status of a file, modifies its access and disclosure attributes, and calculates the space remaining available (unused) on the disc
PIP	Copies the contents of a file to either another file or to or from an external device.

 Copyright November 1982

User Numbers

CP/M 2.2 assigns to each file an associated user number, in the range 0 to 15. Subsequently, it is only possible to access a file when your user number corresponds with the user number assigned to the file. The use of a user number other than 0 is not recommended for stand-alone system use, although it may be necessary from time to time on a network server for network managers in order to perform file copying and deletion for each different user number.

USER Command

When CP/M is first loaded, the current user number is 0.
To change the current user number enter:

USER n RETURN

where "n" is the number to which you want to change, in the range 0 to 15.

If you use a command referring to a file and no files exist with the user number you are using, the message:

NO FILE

is displayed.

If you enter the USER command with no associated user number, the prompt:

?

is displayed.

Changing The Current Disc Drive

To change the current disc drive enter:

d: RETURN

where "d" is the disc drive that you want to use (A, B, C, or D).

For example, if you enter:

B: RETURN

you will see that the CP/M prompt is now B> indicating that the current disc drive is now drive B.

Displaying a Disc Directory (DIR Command)

The DIR command is used when you want to see which of your files are on the disc loaded in the current disc drive or in another disc drive. It does not display files with the SYS attribute or files with a user number different to the current user number.

 Copyright November 1982

You can use the DIR command to:

See which of your files are on the current disc.
See which of your files are on another disc.
Check for the presence of a file on a disc.
Check for the presence of a group of files on a disc.

These facilities are described below:

1. To see which of your files are on the current disc, enter:

   DIR [RETURN]

   The names of all the files on the current disc drive that are associated with your user number are displayed.

   The complete filename is displayed as described previously.

2. To see which of your files are on another disc enter:

   DIR d: [RETURN]

   where "d" is the disc drive you want to look at.

   For example:

   DIR B: [RETURN]

   will display all files with your user number which are stored on disc drive B.

3. To check for the presence of a file on a disc, enter:

   DIR filename [RETURN]

   If CP/M cannot locate the filename you want to examine, the message:

   NO FILE

   is displayed.

4. To check for the presence of a group of files on a disc, enter:

   DIR filename-match [RETURN]

   For example, if you enter:

   DIR B:*.COM [RETURN]

   CP/M will list the names of all the files associated with your current user number that are on disc drive B and have the secondary filename COM.

Note: We recommend that you acquire the habit of checking the disc file directories after you have used CP/M commands to manipulate files until you are completely familiar with their use.

 Copyright November 1982

Saving A Program File (SAVE Command)

The SAVE command is used in developing new programs or in modifying existing programs written in assembler language. To create a program file using the SAVE command, enter:

SAVE p filename

where "p" is the number of "pages" (256-byte segments) to be saved (in decimal), and "filename" is the filename of the new program file.

Deleting A File (ERA Command)

Because the amount of file space available on any disc is limited, it is suggested that you regularly discard any files which you no longer need. Do this by using the ERA (erase) command.

You can use the ERA command to:

Delete a single file.
Delete a group of your files.
Delete all of your files.

These facilities are described below.

Note the following points:

- before deleting any files ensure that you understand the rules for creating filenames and filename matches.
- Note that if you try to delete a file with the access attribute set to R/O, the message "Bdos Err on d: File R/O" is displayed.

1. To delete a single file enter:

   ERA filename [RETURN]

   For example, the command

   ERA B:FRED.FIL [RETURN]

   searches for a file named FRED.FIL on disc drive B with your user number. If it finds this file, it deletes it, freeing the space that it occupied for use by other files.

   The following sequence of commands has the same effect, except that drive B becomes the current drive:

   B: [RETURN]

   ERA FRED.FIL [RETURN]

2. To delete a group of your files, enter:

   ERA filename-match [RETURN]

   For example, the command:

   ERA B:*.BAS [RETURN]

   will delete all BASIC files (files with the extension filename BAS) on the disc in logical drive B.

3. To delete all of your files on a disc under the current user number enter:

   ERA *.* [RETURN]

   CP/M does not carry out this command immediately, but gives you a chance to change your mind by displaying the message:

   ALL FILES (Y/N)?

   If you still want to delete all of your files enter: Y [RETURN] otherwise enter N [RETURN]

Renaming A File (REN Command)

Occasionally you may want to change the name of a file. Do this using the REN (rename) command. The REN command changes one file name only. The old and new file names must be given with their complete primary and extension names as described earlier. Files with the R/O (read-only) access attribute or on a write-protected disc cannot be renamed. Never attempt to rename a file that is already open, for example, when using BASIC. A file renamed in this way will probably lose some of its data.

To change the name of a file, enter:

REN new-filename=old-filename [RETURN]

where "new-filename" is the new name you want to give to the file and "old-filename" is the current name of the file.

For example, the command:

REN JIM.FIL=FRED.FIL [RETURN]

searches for a file named FRED.FIL on the current disc with your user number, and renames it JIM.FIL.

Similarly, the command:

REN B:JIM.FIL=B:FRED.FIL [RETURN]

instructs CP/M to look for a file named FRED.FIL with your user number on disc drive B, and rename it JIM.FIL.

If a file with the name given as 'old filename' does not exist, the message:

NO FILE

is displayed.

If you try to rename a file with a name that already exists for another file, the message:

FILE EXISTS

is displayed and the REN command is ignored.

Inspecting A File (TYPE Command)

The contents of any file that are held on a disc as a sequence of characters can be quickly and conveniently examined by using the TYPE command. The TYPE command recognizes only single file names.

To inspect a file, enter:

TYPE filename [RETURN]

For example, the command:

TYPE BNEWS.PRN [RETURN]

searches for a file named BNEWS.PRN with your user number and if it finds it, displays its contents.

Similarly, the command:

TYPE B:INFO2.TXT [RETURN]

searches for a file named INFO2.TXT with your user number on disc drive B, and if it finds it, displays its contents.

If the file you wish to examine is not on the disc, the message

filename?

is displayed where 'filename' represents the name you entered.

If you attempt to use the TYPE command to display the contents of a non-text file, such as an object program (.COM file), the display may include graphics characters not present in the file. Also, the system may stop with the display/keyboard locked. If this happens, enter CTRL/D.

Displaying The Status Of A Disc Or File (STAT Command)

The STAT command performs the following functions:

- Display amount of space available for storage on the current disc.
- Display the amount of space available for storage on another disc.
- Display the status of an individual file.
- Display the status of a group of files.
- Display the status of all files with the current user number.

- Modify the access and disclosure attributes of a file.

These functions are described below.

1. To display the space available on the disc in the current logical disc drive and any previously-accessed discs present on other logical disc drives, enter:

   STAT [RETURN]

   The display for each disc consists of:

   d: Acc, Space : nnk

   where: Acc is the disc access attribute,
   nn is the space remaining on the disc

   For example, the display produced by this form of the command STAT might be:

   A : R/W, Space : 73k

2. To display the space available on another disc enter:

   STAT d: [RETURN]

   Where d: identifies the logical disc drive containing the disc to be inspected.

   For example, the command:

   STAT C: [RETURN]

   displays the status of the disc in drive C.

3. To display the status of an individual file enter:

   STAT filename [RETURN]

   For example, the command:

   STAT B:PIP.COM [RETURN]

   will display:

```
Recs        Bytes       Ext         Acc   D.FILENAME.TYP

 58          8k          1          R/W   B:(PIP.COM)
Bytes Remaining on    B:    73k.
```

   A file name displayed in parentheses (brackets), such as (B:PIP.COM), means that the file has its disclosure attribute set to SYS. This indicates that the file name is not shown in the directory display produced by the DIR command. The other information in this display is explained in note 4 overleaf.

However, if the named file is not on the disc with the current user number, the message:

NOT FOUND

is displayed.

4. To display the status of a group of files with the current user number enter:

STAT filename-match [RETURN]

For example, the command:

STAT B:*.TEX [RETURN]

will display the status of all files with the extension filename TEX and with the current user number on the disc currently on disc drive B.

The display will be in the form:

```
   Rec        Bytes      Ext          Acc    D:FILENAME.TYP
    8          1K         1           R/O    B:MYFILE1.TEX
    4          1K         1           R/W    B:DRIVE.TEX
   16          2K         1           R/O    B:(QUESTION.TEX)
 Bytes Remaining on   B:  237K
```

This display shows the following information:

Rec - The number of 128-byte physical disc records allocated to the file

Bytes - The number of bytes on the disc allocated to the file in units of 1K (1024 bytes)

Ext - the number of physical extents on the disc allocated to the file

Acc - The setting of the access attribute for each file, either R/O (read-only) or R/W (read-write)

D:FILENAME.TYP - The logical disc drive name, the primary filename, and the extension filename of each file. If this name is enclosed in parentheses, the file has its disclosure attribute set to SYS; otherwise this attribute is set to DIR.

5. To alter the access and disclosure attributes of a file.

STAT filename $R/O [RETURN]

sets the access attribute to the read-only state.

STAT filename $R/W [RETURN]

 Copyright November 1982

restores the access attribute to the default read/write state.

STAT filename $SYS RETURN

sets the disclosure attribute to SYS so that the file is not listed by the DIR function.

STAT filename $DIR RETURN

sets file disclosure attribute to DIR so that the file is listed by the DIR function. This is the default setting.

The display given by

STAT *.* RETURN

shows the access and disclosure attributes of each file. Files that have the disclosure attribute SYS appear with their names in brackets.

Copying files (PIP Command)

You will sometimes need to copy files which already exist on a disc. Use the PIP command to do this. On a single disc drive system use COPYFIL and COPYDSK to copy from one disc to another as described in Appendix D.

The PIP command allows you to:

- Copy a file from one disc to another.
- Copy a group of files from one disc to another.
- Make a second copy of a file on the same disc.
- Copy a file or group of files from one user number to the current user number.
- Copy two or more files to create a single file.
- Copy a file to or from an external device:

  Keyboard to disc
  disc to display
  disc to printer
  disc to external device
  external device to disc

Note that if, after copying a file or files, the disc directory contains a filename with the extension filename .$$$, then that file has been incompletely copied due to an input/output error during copying and the copy operation should be run again.

1. To copy a file from one disc to another using the same file name enter:

   PIP d:=c:filename RETURN

where:

d:	indicates the destination disc drive
=	separates the destination file description from the source file description
c:	indicates the source disc drive. When omitted, the current logical disc drive is assumed
filename	is the name of the file to be copied

For example, the command:

PIP C:=FRED.FIL RETURN

will copy the file FRED.FIL from the current drive to drive C.

2. To copy a group of files from one disc to another, enter:

PIP d:=c:filename-match RETURN

where c: and d: have the same meanings as above.

For example, the command:

PIP B:=A:*.COM RETURN

would copy all the files with the extension file name COM on the disc in drive A onto the disc in drive B, giving them the same names.

3. To make a second copy of a single file on the current disc, enter:

PIP destination=filename RETURN

where:

destination	is the filename of the file to be created. It must not be the same as the original filename.
filename	is the filename of the original file to be copied.

A filename match cannot be used in a name to identify either the newly-created file or the original file.

4. To copy a file or group of files from one user number to the current user number:

   a. Make sure that the PIP program has been copied to the user number for whom copies are to be created by PIP.

   b. Use the USER command to set the current user number to that required for the files to be created by the PIP program.

   c. If the copying is to be carried out onto the same disc, enter:

PIP d:=filename[Gn] RETURN

 Copyright November 1982

d. If the copying is to be made onto another disc, enter:

PIP d:=c:filename[Gn] RETURN

where the user number of the source file(s) is specified by [Gn] and "filename" can be a filename-match.

For example, the command:

PIP B:=A:FRED.BAS[G2] RETURN

copies the file FRED.BAS from user number 2 on drive A to your user number on drive B.

An alternative method that does not require an additional copy of PIP.COM with your user number is shown below:

USER 0 RETURN

PIP RETURN

to load the user 0 copy of PIP.COM into memory

RETURN

to terminate execution of PIP

USER n RETURN

to change to user number n

SAVE 0 G.COM RETURN

to save a dummy .COM file under the desired user number.

G RETURN

to restart PIP running under the chosen user number. Upon restarting, PIP will display an asterisk. This is a prompt. Enter the copying parameters as described above and press the RETURN key. Note that the G command will restart the last program loaded into the TPA, in this case the PIP utility. For example:

B:=A:.*[GO]

To determine the current user number, enter:

STAT USR: RETURN

The program file STAT.COM must be present under the current user number for this to work.

5. To copy two or more files into a single file, enter:

PIP d:filename=C:filename,filename,...

6. To read up to 8K bytes of text (ASCII) characters from an input device with the logical device name RDR: and connected through the SIO4 serial interface port into a disc file. See Appendix I for further details The procedure for this is:

   a. Initialize the SIO4 interface by selecting the lineprinter option with the SIO4 interface and the appropriate baud rate.

   b. Connect the input device to the SIO4 port. Refer to the 380Z Disc System Information File for details on this connection, which must be carried out carefully.

   c. Start the PIP program as follows:

      PIP filename=RDR: [RETURN]

   d. Start the input device.

   e. The last character in the input file must be the CTRL/Z character to indicate to PIP that the end of file has been reached.

7. To send a disc file containing text (ASCII) characters to an output device, such as a lineprinter, with the logical device name LST:

   a. Select the line printer option

   b. Start the PIP program as follows:

      PIP LST:=filename [RETURN]

8. To create a text file on disc containing a stream of up to 8K ASCII characters transmitted from the keyboard (logical device name CON:):

   a. Start the PIP program as follows:

      PIP filename=CON: [RETURN]

   b. During keyboard entry, characters on the current line of the display can be deleted (DELT key) and reentered. Note that delete characters are stored in the file.

      Deletion is not possible after RETURN has been pressed or after the end of the line has been reached, when the cursor is automatically moved to the start of the next line.

      Explicit use of the RETURN key is included in the text file. Automatic cursor return/line advance does not cause a character to be included in the text file.

   c. At the end of the text entry, the PIP program is terminated by entering the character CTRL/Z.

9. To transfer a text file from one device (RDR:) to another device (LST: or CON:) use a combination of the input and output methods described in Notes 6 to 8 above.

 Copyright November 1982

Running Other Programs

To load a program, enter the name of the .COM file which contains the program. For example, to load the BASIC interpreter with the name "BASICS", enter:

BASICS [argument-list] RETURN

Consult the appropriate software documentation or check with the network manager to find out the name of the file containing the program that you require.

 Copyright November 1982

CHAPTER 6

OPERATIONS ON DISCS

DISC STORAGE

All the programs and data that you use with CP/M, including the CP/M programs themselves, must be stored in files on a disc. One of the most important operations involved in using CP/M is copying information from one disc to another in order to ensure that:

- you have the right information available when you need it
- you have copies of all your important files on two separate discs so that if one disc is damaged you can use the other.

This chapter deals with copying complete discs, while Chapter 5 covers the copying of individual files. It is essential that you master the material in this chapter in order to be able to make copies of your software distribution discs. You only receive one copy of a software distribution disc so you should make a copy of it before you use the software it contains. Never use the software distribution disc for day-to-day operations.

Before starting to work through this chapter make sure that you are familiar with the procedures for switching your system on and off and loading the CP/M operating system (see Chapter 4).

The importance of keeping backup copies of all useful discs cannot be emphasized too strongly. It is only too easy to make a mistake and lose a large amount of useful information. It would be better to spend a few minutes making a copy than to have to spend several hours restoring lost files. Lost .COM files are not readily replaceable.

CP/M 2.2 on 5.25-Inch Discs

Note that a 5.25-inch disc has insufficient space to contain the full CP/M system software in the three reserved system tracks. One program (CCP.SYS) is consequently held in the user area of the disc (under user number 15). For added security, Research Machines has set the access attribute of this program to R/O (read-only). It does not appear in the directory display but does appear following a STAT *.* command. Note also that certain application packages that create their own directory (for example, WordStar) sometimes display CCP.SYS. Do not change the attributes of CCP.SYS. Any alteration to this program may cause CP/M to fail. The above comments on CCP.SYS do not apply to 8-inch discs. These have sufficient space to hold all of CP/M in their three reserved tracks.

Changing Discs

Whenever you change the disc in a disc drive without resetting the system or entering CTRL/C, CP/M will treat all the files on the new disc as if set to READ ONLY in order to protect them. Consequently, you must either reset the system and reload CP/M or enter CTRL/C in order to continue and use the newly-inserted disc.

 Copyright November 1982

DISC MANAGEMENT UTILITIES

The remaining sections of this chapter describe the following disc management facilities:

FORMAT - To prepare a new disc for use. Can be used to reformat used discs. FORMAT makes sure that the disc is usable.

COPYSYS - To copy the CP/M operating system files onto another disc.

FASTCOPY - Copies the complete contents of one or both sides of a disc onto another disc, and will optionally format the output (destination) disc.

Formatting a Disc (FORMAT Program)

It is important the that FORMAT program be used with great care. If it is run on a used disc it will completely erase all existing files, including the CP/M operating system. Make sure you understand the 380Z disc drive labelling conventions before you use FORMAT.

All discs used with the 380Z Disc System must be correctly formatted. New discs must be formatted using either the CP/M utility program FORMAT (below) or the Research Machines utility programs COPYSYS or FASTCOPY before they can be used.

Checking if a Disc is Already Formatted

If you wish to check whether or not a disc has already been formatted, first place a system disc in drive A and load CP/M. Place the disc you wish to check in the second drive, if available, or replace the system disc, and enter:

DIR [RETURN]

If the system displays either the disc directory or the message:

NOT FOUND

then the disc has already been formatted.

If the response is the message:

Disc Err on A: Bad Sector

then the disc has not been formatted. In this case, in order to restart CP/M, replace the system disc and enter:

[CTRL/C]

 Copyright November 1982

Using the FORMAT Program

To use FORMAT, enter:

FORMAT [RETURN]

The FORMAT program displays a message similar to:

```
FORMAT/M V4.2B

WARNING - destroys all programs
Remove system disk!

Format which disk (A,B,C,D):
```

Note that the version number, in this case V4.2B, may be different.

Remove the CP/M system disc from whichever drive contains it to ensure that you do not format again it by mistake and destroy all its files. Then enter the drive name containing the disc surface to be formatted. The system displays the message:

```
Insert disk in d, then type RETURN
```

Insert the disc to be formatted in the named drive (if it is not already present) and enter:

[RETURN]

The formatting operation is started. If it finishes successfully, the disc in drive d is formatted, and the FORMAT program displays the message:

```
Format complete, no errors
Format which disk (A,B,C,D):
```

You may now request formatting of another disc surface (or the second surface of the first disc, if a double-sided disc) by entering its logical drive name.

The FORMAT program displays the "Insert disc ..." message again. As soon as you enter [RETURN], formatting of the disc in drive d is started. To end the FORMAT program, enter:

[CTRL/C]

The FORMAT program then returns control to CP/M with the message:

```
Replace system disk
```

Replace the system disc (if previously removed).

Executing the FORMAT program leaves the system in scrolling (unpaged) mode. If you wish to restore the system to page mode, enter:

[CTRL/A]

 Copyright November 1982

The error messages produced by FORMAT, their explanations, and the appropriate responses are summarized in Table 6.1.

Table 6.1 FORMAT Program Error Messages

Message	Explanation	Response
Disk not ready Format which disk (A,B,C,D):	You tried to format an empty disc drive	i) Insert a disc ii) Close the drive door iii) Try again
Invalid disk, try again	You tried to format a drive other than A,B,C, or D	i) Enter a valid drive name
U = a, T = n, S = j Format complete, nn errors	This is an error report of the FORMAT program disc read or write errors U = the relevant drive T = the track S = the sector nn= the number of errors	Rerun the FORMAT program. If errors persist discard the disc (return a new disc to the supplier) and try again with a new disc.

Copying CP/M (COPYSYS program)

It is common practice to keep a copy of the CP/M operating system on all of your discs (but refer to your CP/M Licence Agreement). You can then start or restart the system on any disc.

Two CP/M utility programs can be used consecutively (MOVCPM and SYSGEN) to place a copy of the operating system onto another disc. The use of MOVCPM and SYSGEN for single-drive systems is described in appendix C.

Alternatively, on a dual drive system, you may use COPYSYS. COPYSYS is a utility designed to help in the automatic execution of several CP/M functions associated with preparing a new disc and copying the operating system to it. It will optionally format a new disc, (or re-format an old disc). It always creates a system to suit the memory size of your machine, and copies both the operating system and the utility programs PIP, STAT, FASTCOPY, and FORMAT onto another disc.

COPYSYS works by chaining together several CP/M utilities. It uses FORMAT (optionally) to format the disc in drive B; it uses the command MOVCPM * * to create a CP/M system configured to the size of the machine being used; it uses SYSGEN to transfer this CP/M system onto the disc in drive B; and, finally, it uses a series of PIP commands to transfer the four commonly required utilities onto the disc in drive B. These functions are performed

by COPYSYS in four phases:

Phase 1 - accepts and validates user requirements
Phase 2 - optionally formats the disc in drive B
Phase 3 - creates a system and copies it on to the disc in drive B
Phase 4 - copies PIP, STAT, FORMAT and FASTCOPY from drive A on to the disc in drive B.

HOW TO USE COPYSYS

The notes below give step-by-step instructions on using COPYSYS. Error messages displayed by COPYSYS and the appropriate responses are summarized in table 6.2.

1. Insert the system disc you wish to copy in drive A.

2. Insert the output disc onto which you wish to copy the operating system in drive B.

3. Enter: B

   to load the C/M 2.2 operating system (if not already loaded)

4. When the operating system displays the prompt:

   A>

5. Load COPYSYS by entering:

   COPYSYS [RETURN]

6. The COPYSYS program will then display a screen similar to:

```
COPYSYS V1.0 Phase 1 of 4

SYSTEM COPY UTILITY
  This program will produce a CP/M
  operating system to suit the memory size of
  your machine and put this system and the
  commonly used utilities (FASTCOPY, FORMAT,
  PIP and STAT) onto a formatted or
  unformatted disc in drive B.

  FORMAT new disc (Y/N)?
```

   Note that the version number, in this case V1.0, may be different

7. If you want COPYSYS to format a new or used disc, enter: Y

   If you do not want COPYSYS to format the disc but only to create a new operating system and then to copy this operating system and the FORMAT, FASTCOPY, PIP, and STAT programs onto a formatted disc, enter: N

8. COPYSYS then displays:

   Place Disc in Drive B and Press <RETURN>

 Copyright November 1982

9. If you have not already inserted the output disc in drive B (See step 2 above), do so, and then enter:

   RETURN

10. If you replied 'Y' in step 7, COPYSYS will clear the screen and display the message:

```
COPYSYS          Phase      2 of 4

FORMATTING new disc

                 (please wait)
```

11. As soon as COPYSYS starts creating the new operating system, it will clear the screen and display the message:

```
COPYSYS          Phase      3 of 4

CREATING SYSTEM

                 (please wait)
```

12. As soon as COPYSYS starts copying both the newly-created operating system and the FORMAT, PIP, FASTCOPY, and STAT programs onto the output disc, it clears the screen and displays the message:

```
COPYSYS          Phase      4 of 4

COPYING Common utilities to disc in
drive B

                 (please wait)
```

13. Upon completion, COPYSYS clears the screen and displays the message:

```
New system disc created in drive B

      COPYSYS COMPLETE

A>
```

14. You may now remove the original disc from drive A and run your system using the disc in drive B.

 Copyright November 1982

Table 6.2. COPYSYS Error Messages and Responses

Message	Response
COPYSYS requires the following to be on the disc in drive A COPYSYS1.COM,MOVCPM.COM,SYSGEN.COM PIP.COM,FASTCOPY.COM,STAT.COM, FORMAT.COM - COPYSYS abandoned A>	One or more of the files named is missing from the source disc. i) Copy the missing file(s) onto the disc using PIP. ii) Try again.
Disc not present in drive B - COPYSYS Abandoned A>	There is no disc in drive B, or the door is not closed. i) Ensure that a disc is present. ii) Close the drive door. iii) Try again.
Disc in drive B is WRITE PROTECTED - COPYSYS Abandoned A>	The disc you are trying to write to is physically write-protected. i) Remove the covering from the write protect notch on a 5.25-inch disc (or cover it on an 8-inch disc). ii) Try again.
Disc B already Formatted! - reformat disc (Y/N)?	The output disc you are trying to format is already formatted. Reformatting will destroy all files on this disc. If you want to reformat, enter: Y If you do not want to reformat the output disc, you must end the COPYSYS run. Enter: N

 Copyright November 1982

Table 6.2 (continued)

Disc B not Formatted, please rerun with Format selected - COPYSYS Abandoned A>	You have pressed N in response to the previous prompt from COPYSYS. COPYSYS Has returned you to CP/M.
Insufficient free space on disc B COPYSYS requires at least 28K - COPYSYS Abandoned A>	The output disc has insufficient space for the four utilities to be copied by COPYSYS. i) Use the ERA command to clear 28K of space on disc (if there are any files that can be deleted) ii) If you cannot erase enough files, use MOVCPM and SYSGEN to create a new system on the destination disc
Directory full on disc B. COPYSYS uses 5 directory entries - COPYSYS Abandoned A>	The directory on the output disc already contains sixty or more entries. COPYSYS needs five entries. The maximum number of directory entries on a disc is 64. i) Use ERA to delete up to five files, if possible ii) If you cannot erase enough files, you can use MOVCPM and SYSGEN to create only the new operating system on the output disc. You can subsequently copy any of the missing utilities (STAT, PIP, and FASTCOPY) when unused space and directory entries become available.

 Copyright November 1982

Copying Discs (FASTCOPY Utility)

The FASTCOPY utility copies the entire contents of a disc surface onto another disc surface. The main features of FASTCOPY include:

- Surface to surface copying on the same (double-sided) disc using the same physical disc drive
- Surface to surface copying on separate discs using two physical disc drives
- Double-surface copying using two physical drives
- System disc can be removed in order to copy a work disc
- Optional formatting of the output disc surface (or both surfaces if two surfaces are to be copied)
- Runs on 380Z systems with COS 3.4 in 40-character mode and on later versions in 80-character mode
- Runs on 5.25-inch and 8-inch disc systems.

You are prompted by FASTCOPY for the information required for each copying operation. Once FASTCOPY is loaded, it can run a series of disc copying operations.

To run FASTCOPY, make sure that you have a system disc containing the FASTCOPY program inserted in the 380Z disc drive.

Return to the CP/M command level, and enter:

FASTCOPY [RETURN]

The FASTCOPY dialogue is shown in the example below. Note the following points:

1. The message 'Destination should be a blank disc' should be understood to mean that the output disc surface (or surfaces) should not contain any files that you wish to keep, as these will be overwritten during the copying operation.
2. If the output disc is a new and unformatted disc, it must be formatted. FASTCOPY will do this if requested. Reply 'Y' or 'y' to the question 'Format destination ?'.
3. If the output disc has already been formatted, it need not be formatted again.
4. Double-surface copying will always involve either copying the disc in drives A and C (response A) into the disc in drives B and D or vice versa (response B). FASTCOPY will repeat its prompt if you give any other response.
5. Single-surface copying can be performed from any logical disc drive to any other, different drive. FASTCOPY will not copy to the same disc surface. Use the CPYDSK program described in appendix D for this.

 Copyright November 1982

6. Always check your responses. The copying operation can be abandoned at any point during the dialogue up to the message:

   Are you sure? (Y/N):

   The response 'Y' at this point launches the execution of the requested copying operation. If it is necessary to remove the system disc in order to copy a work disc, these disc handling operations must be carried out before replying to this message.

7. During FASTCOPY execution, an asterisk is displayed moving from side to side (this is to show you that FASTCOPY is running.)

An example of using FASTCOPY to copy both surfaces of a disc onto another disc is shown below.

Example of Using FASTCOPY

The use of FASTCOPY to copy both surfaces of a disc onto another disc is shown as a series of steps. This example also shows the steps for copying single sided discs.

1. Insert your system disc in drive A and press the RESET button.

2. Enter: B

   to load CP/M

3. CP/M displays the prompt:

   A>

4. Enter: FASTCOPY RETURN

   to load the FASTCOPY program.

5. FASTCOPY displays a screen similar to:

```
Fast Disc Image Copy Program V1.4A

WARNING

All files on destination drive are overwritten.

Source is location of master
Destination should be a blank disc
Type (RETURN) exit
Format destination (Y/N)?
```

   Note that the version number, in this case V1.4A, may be different.

6. Do you want to copy the system disc, or another disc? If you want to copy the system disc, continue from step 9 below.

 Copyright November 1982

7. Remove the system disc from drive A.

8. Insert the source disc (the disc whose contents you want to copy) into drive A.

9. Insert the destination disc in drive B. The destination disc is a new or used disc onto which the copy is to be made.

10. Do you want to format the disc in drive B? If the destination disc is new, it will be necessary to format it.

    If you need to format the disc in drive B, enter: Y
    If you do not need to format the disc in drive B, enter: N

11. FASTCOPY then displays the message:

    Double sided disc copy (Y/N)?:

12. If you wish to copy both sides of the disc in drive A, enter: Y
    (Continue from step 19.)

    (If you had wished to copy only one side of the disc, enter: N
    and continue with the next step).

13. FASTCOPY displays:

    Source drive? (A,B,C,D...):

14. Enter the source drive: A or B or C or D

15. FASTCOPY displays:

    Destination drive? (A,B,C,D...):

16. Enter the destination drive: A or B or C or D

17. FASTCOPY then displays:

    Copying from source drive x to destination drive y:
    Are you sure? (Y/N):

    where 'x' is the source drive and 'y' is the destination drive that you have specified.

18. Jump to step 22.

19. FASTCOPY then displays:

    Source drive? (A,B,C,D...)

20. Enter the source drive A

21. FASTCOPY then displays:

    Copying from source drive A,C to destination drive B/D
    Are you Sure? (Y/N):

 Copyright November 1982

22. Do you want to start the copy or change any of the displayed instructions?.

    If you want to start the copying process, enter Y

    If you want to change any of the instructions that you have entered, enter N and return to step 10 above.

23. FASTCOPY then displays:

    Copying...

24. Upon completion, FASTCOPY briefly displays:

    XX TRACKS
    COPY COMPLETE

    where XX = 40 for 5.25-inch disc systems
    or XX = 77 for 8-inch disc systems

25. Do you want to copy another disc or return to CP/M?

    If you want to copy another disc:

    i) Remove the discs used in the previous copying operation

    ii) Insert new source and destination disc

    iii) Continue from step 10 above

    If you want to return to CP/M and terminate FASTCOPY

    i) Enter [RETURN] or [CTRL/C]

    ii) A> is displayed

During the copying process, the asterisk at the bottom of the screen will move from side to side to show you that FASTCOPY is in operation.

Error Recovery

FASTCOPY can recognize a number of error conditions and produce relevant screen messages. These messages, their meaning, and any corrective action necessary, are listed in Table 6.3

 Copyright November 1982

Table 6.3 FASTCOPY Error Messages and Responses

Message	Response
Cannot copy to same disc	You have requested the same drives for source and destination discs. Try again with a correct drive name.
No disc in destination drive. Hit any key when disc present.	You have tried to copy to a drive where there is no disc or whose door is open. i) Ensure that a disc is present ii) Close the drive door iii) Press any key other than RETURN or CTRL/C
Disc formatted, reformat (Y/N)?	The destination disc is already formatted. Reformatting (Y) will destroy all files on the disc. 'N' cancels the FASTCOPY operation.
Cannot initialize disc in drive:A	The source disc cannot be initialized, because there is no disc in the drive, or the door is not closed. i) FASTCOPY will restart ii) Correct the situation iii) Try again
U=drive name T=nn S=nn BAD READ FROM MASTER Press <SPACE> bar to restart FASTCOPY, or press <RETURN> key to abort.	You have removed the source disc during copying. Try running FASTCOPY again SPACE or abandon RETURN.
U=drive name T=nn S=nn BAD WRITE TO COPY PRESS <SPACE> bar to restart FASTCOPY, or press <RETURN> key to abort.	Either the destination disc is physically damaged, or it has a bad sector and FORMAT has not been selected, or the drive door is open. FASTCOPY will attempt to complete the write operation ten times before it aborts. Try running FASTCOPY again SPACE or abandon RETURN.

 Copyright November 1982

Table 6.3 continued

Message	Response
Write disc NOT blank, overwrite (Y/N)?	The destination disc is not blank. Do you want to overwrite what is written on it? If you want to overwrite: Enter: Y If you do not want to overwrite Enter: N FASTCOPY will restart
Either: Disc Write Protected Cover Write Protect Notch or: Disc Write Protected Uncover Write Protect Notch and: PRESS <SPACE> bar to restart FASTCOPY, or press <RETURN> key to abort.	The physical write protect notch on the destination disc is stopping write operations. i) Remove the covering from the write protect notch on a 5.25-inch disc (or cover it on an 8-inch disc) ii) FASTCOPY will wait iii) Try running FASTCOPY again [SPACE] or abandon [RETURN]
Sorry requires COS 3.4 or later!	You have tried to run FASTCOPY on a 380Z with an unsuitable version of the COS operating system. The program has returned to CP/M.

Disc Input/Output Error Messages (BDOS)

If, during the reading or writing of data on discs, an error condition is encountered by BDOS (the part of CP/M that performs its file handling operations), BDOS displays the message:

BDOS ERR on d: error

where 'd' identifies the logical disc drive on which the error occurred and 'error' is one of the following:

BAD SECTOR
- the disc has a sector that cannot be read from or written to due to wear, damage, or poor quality
- the disc has been formatted on a non-CP/M system and the formatting is incompatible with CP/M formatting
- the disc drive on the disc controller component is faulty

SELECT
- the logical disc drive name used is not known on the system.

READ ONLY
- an attempt has been made to write onto a disc file with the access attribute set to R/O (read-only) or any file on a disc set to read-only by CP/M. The latter condition occurs when a disc is replaced during processing. CP/M must be reloaded. Press CTRL/C to do this. This is called the warm start procedure. The contents of user memory TPA are not overwritten.

 Copyright November 1982

APPENDIX A

INSTALLING THE 380Z

This appendix explains how to connect up a newly-delivered 380Z Disc system consisting of the following separate components:

- a central processor
- a visual display (video monitor) (if ordered)
- a keyboard.
- an 8-inch disc unit (if ordered)

UNPACKING

Remove the internal packaging from inside the 380Z central processor before the power is turned on. Instructions on how to remove this packaging are given in the leaflet "Installation Notes" packed with the processor.

Unpack the components and check that you have:

- a Research Machines 380Z central processor together with a mains lead fitted with a standard 13-amp 3-pin plug with a 3-amp fuse fitted
- if you ordered an 8-inch disc (FDS) system, a disc drive cabinet together with a mains lead and a signal cable with similar metal, 37-pin, male connectors at each end
- a keyboard fitted with a length of cable and a metal, 15-pin, male connector.

Keep all the boxes and packing materials. In the event of any faults occurring with the equipment you may then use the original packaging to return the defective item to Research Machines.

If any of the items that should have been delivered are missing, please contact Research Machines stating your order number and what is missing and the omission will be rectified.

In addition you will require:

- a video monitor (possibly supplied by Research Machines) and a lead for connecting the monitor to the central processor. Alternatively, you can use a 625-line TV receiver (UHF) if you have a 40-character 380Z system. If you have a 40/80 character (Varitext) system, you must have a special interface fitted before it can use a TV receiver as its VDU. See Appendix E.
- a mains power lead for the video monitor, complete with standard 13-amp 3-pin plug

 Copyright November 1982

- either a 2-way mains adaptor or an extension lead for a 5.25-inch disc system or a 3-way mains adaptor or an extension lead for an 8-inch disc system.

SETTING UP

Select a suitable location close to a mains outlet.

When setting the 380Z up, make sure that:

- the equipment is not in direct sunlight
- the air flow to fans at the rear of the central processor and the 8-inch disc drives, if present, is not obstructed
- the keyboard cable is not taut or it may be pulled out accidentally
- the system is in an area that is reasonably free from dirt and dust which can damage both discs and disc drives
- you can sit comfortably at the keyboard and can see the monitor, reach the disc drives, and have a space on which you can rest papers. Special paper stands are available for holding papers in a comfortable position for reading and are particularly useful if your desk or table has only a small space left on it after the 380Z has been installed. A suggested layout is to put the keyboard in front of the monitor and the central processor to the right. If you have an 8-inch disc unit, place the 380Z on top of this unit.

CONNECTING UP

All components of the system must be connected to the same mains adaptor or extension lead, otherwise the system may fail due to earthline interference. Figure A.1 indicates the various sockets that can be found on the rear of the 380Z and the devices to which they can be connected.

Before connecting up, ensure that the mains power supply to the adaptor or extension lead is off. Then:

- Connect the mains lead supplied with the central processor into the power socket at the rear of the cabinet and into the extension lead or adaptor
- plug the mains lead on the monitor or TV into the extension lead or adaptor
- If you have an 8-inch disc unit, connect the mains lead supplied to the rear of the disc unit and to the extension lead or adaptor. Connect the signal cable into the socket on the rear of the central processor (see figure A.1) and the other end into the socket on the rear of the disc unit
- Connect the keyboard lead into the socket at the rear of the processor

 Copyright November 1982

- Connect the monitor to the central processor using the separate cable provided as follows:

  - screw one end of the cable into the appropriate socket at the rear of the processor making sure the sleeve on the cable is fully tightened up on the screw thread

  - Plug the other end of the cable onto the socket labelled IN at the back of the monitor.

  - Set the switch at the rear of the monitor to the 75-ohm position.

- Refer to Appendix E for information on connecting a TV receiver as the VDU.

- The procedure for switching on is described in chapter 4.

HANDLING

While the 380Z and its peripheral devices are built to withstand frequent handling they should, nevertheless be handled with care. In particular, they should not be allowed to drop or be subjected to shocks, knocks, or vibration.

 Copyright November 1982

Earlier Models

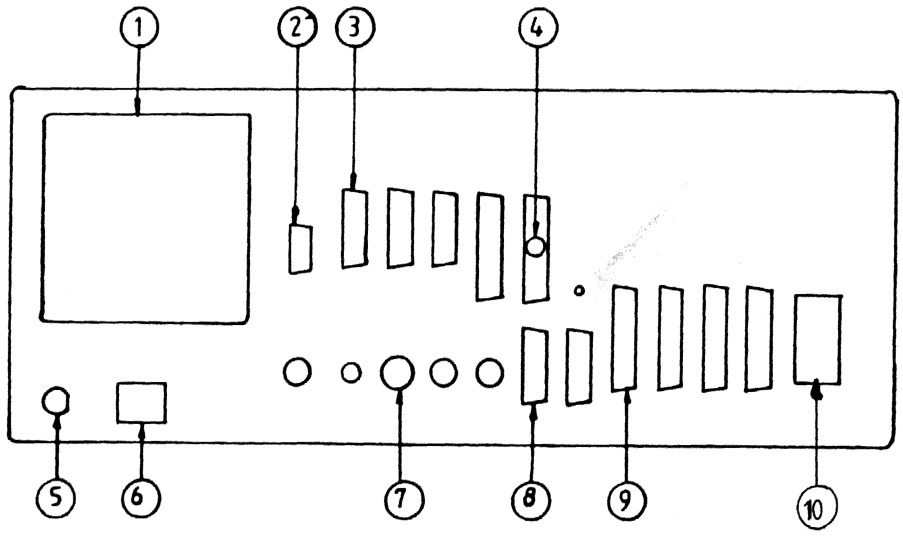

Later Models

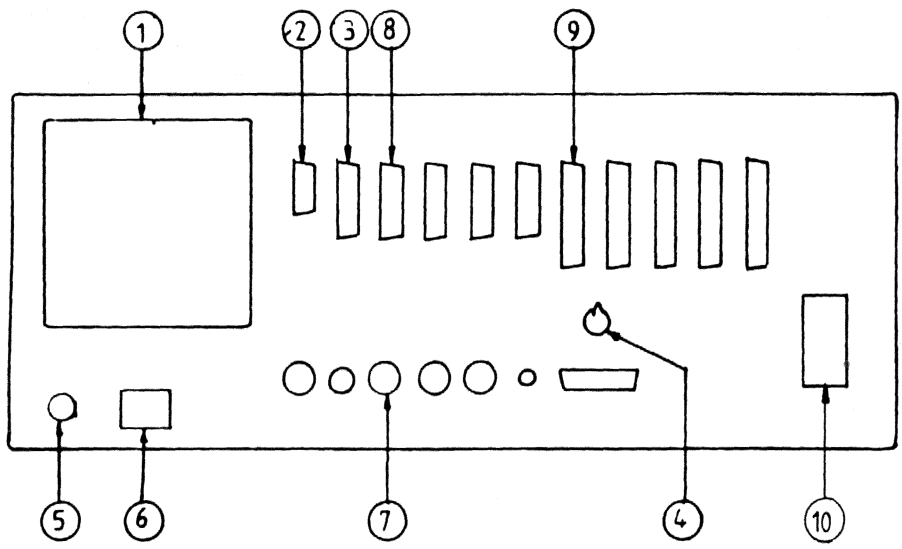

KEY

1.	Fan	6.	Power
2.	Keyboard interface	7.	Video Monitor
3.	Parallel Interface (user I/O)	8.	Serial Interface (SIO4)
4.	Network Cable	9.	8-Inch Disc Drive
5.	Fuse	10.	RGB

Figure A.1 380Z rear Panel

 Copyright November 1982

APPENDIX B

GLOSSARY OF TERMS

Application program
: Program designed to carry out a particular task or set of tasks specific to a particular use.

Argument
: An expression that affects the action of a function. For example, in the function:

```
STAT *.*
```

the characters "*.*" constitute the argument that defines the operation of the STAT function.

ASCII
: American Standard Code for Information Interchange; the binary code by which characters are represented within the 380Z.

Assembler
: A program to translate an assembly language source program into machine code. It is an item of system software, and is specific to a particular model of computer.

Assembly Language
: A low-level programming language that is translated into machine code by an assembler. A computer's assembly language is closely related to its machine code (each instruction is translated into one machine code instruction). It is easier to program in assembly language than in machine code, but it is more difficult than in a high-level language. On the other hand, assembly language programs occupy less memory, operate faster, and more closely control the activities of the computer than do high-level language programs.

BASIC
: Beginner's All-purpose Symbolic Instruction Code: a high-level programming language commonly available on microcomputers. The main advantage of BASIC is that it is easier to learn its vocabulary and grammar than that of most other languages.

Baud rate
: The rate at which data is transmitted through a serial interface. For most practical purposes it is (and is usually described as) "bits per second".

BDOS Basic Disc Operating System.
: This is the part of the CP/M operating system that performs all the file handling.

BIOS Basic Input/Output System
: This is the part of the CP/M operating system that is specific to the hardware. It performs the basic input/output functions to and from the devices on the system.

 Copyright November 1982

Bit

An abbreviation for Binary Digit: either 0 or 1, one of the two digits commonly used in binary notation.

Booting (Bootstrap)

Synonymous with "cold start": the process of loading system software from storage (usually cassette or disc) into computer memory. Firstly, a small part of the software (known in CP/M as BOOT) is loaded into memory, and is in turn used to pull in the rest of the system. Thus, it is often compared to the process of pulling oneself up by one's bootstraps.

Break

To halt execution of a program with a keystroke or an instruction in the program.

Buffer

A part of computer memory set aside for the temporary storage of data. It can be filled and emptied repeatedly without disturbing the contents of the rest of the memory.

Bug

An error in the logic of a program or a malfunction in computer hardware.

Bus

A channel or path used for transferring signals from one device to another. A bus cable is usually a number of wires housed together in a flat strip and used to transfer signals from one printed circuit board to another.

Byte

Usually used to refer to a set of eight bits representing the binary code for a single character. Computer memory sizes, and the size of individual files, are often described in kilobytes.

Cassette-based (configuration or microcomputer)

A microcomputer that uses cassette recorders and magnetic tapes to save and load programs and data.

Cassette Operating System (COS)

The basic control program (monitor program) for the 380Z micro-computer.

Central Processing Unit (CPU)

The "nerve centre" of the computer, consisting of the arithmetic unit, the control unit and the memory. Also known as the central processor.

Character set

The complete set of characters associated with a particular device or coding system; for example, A...Z, a...z, 0...9 and certain special characters and punctuation marks. Different national languages often require different character sets. This difference can be slight (as between English and French national character sets), or extensive (as between English and Katakana - Japanese). The 380Z uses the standard ASCII character set.

Command
A sequence of characters entered from the keyboard and executed by COS, CP/M, or a CP/M utility program. Each command consists of the name of the command and an optional list of arguments.

Compatibility
Two computers are compatible if programs can be transferred between them and used with only minor alterations.

Compiler
A program that translates a high-level language program into a computer's machine code before the program is executed. Each high-level language instruction usually generates several machine code instructions.

Concatenate
The joining together of two or more entities end to end into a single entity.

Configuration
A term used to describe the type and combination of central processor, its attached devices, and/or software.

Control character
A character typed while the CTRL key is simultaneously held down. Control characters are used to enter special commands into the computer (for example, to turn the printer on and off, to stop output, or to restart CP/M). Application software often requires the user to enter control characters whenever a special function is required (for example, the WordStar package uses control characters for its cursor movement and character deletion functions).

COS See Cassette Operating System

CP/M operating system
An abbreviation for "control program for microcomputers", the operating system used by the 380Z. It is the most widely used disc operating system currently in use on 8-bit microcomputers. Originally developed by Digital Research, this operating system is now available with a wide variety of system software and application programs.

Current disc
See logged-on disc.

Data
Information.

Data file
An organized collection of data (as opposed to a program) in the form of a set of related records held on magnetic tape or disc.

Default
The value of an argument that is assumed by the system when no value is specified by the user.

 Copyright November 1982

Directory

A special area of a disc containing information on the disc files and their location. A list of these file names can be output with the DIR command.

Disc (Floppy)

A non-rigid, lightweight disc coated with magnetic oxide. It rotates like a small gramophone record inside a square plastic envelope. Available in two sizes:

8 inches in diameter, can store about 250 Kbytes of data on a single surface (about 7000 BASIC program lines). Sometimes referred to as "Standard Floppy Disk".

5.25 inches in diameter, can store 72 Kbytes of data on a single surface (about 2000 BASIC program lines). Sometimes referred to as "Mini Floppy Disk".

Disc drive

The mechanism by which a magnetic disc storage medium is controlled by the computer in order to provide computer access to the information held on the disc. A disc drive has two main motors: one to spin the disc at high speed, and the other to move a read/write head over the surface of the disc. Information is transmitted to and retrieved from the disc via the read/write head.

Disc operating system

The set of programs that control a disc-based computer system.

Diskette

See "Disc"

Documentation

1) A description of a program often including notes, flowcharts, a program listing, test data and sample output.

2) A description of a computer and/or its software, usually in the form of manuals. The manuals will explain how to use the system.

Editor (text editor)

A program that allows the user to edit the contents of a text file. In some microcomputers, editing facilities are built into the operating system and are automatically available through simple commands. Editing facilities are very valuable since they obviate the need to retype complete files when only minor modifications are required. The standard 380Z text editor is a program called TXED, although the WordStar word processing program also provides text manipulation facilities.

Enhance

To improve or "upgrade" a computer configuration by the addition of an extra facility or item of equipment.

Error Message

The computer response to a faulty command, or an error detected by the operating system or the application package currently in use, and usually output to either screen or printer.

 Copyright November 1982

Execute
To carry out the instructions contained in a program (synonymous with "run").

File
A file is a set of information stored on disc or tape and identified by its own file name. A file can be any length, and can contain any amount of data, including none (an 'empty' file). However, the size of a disc may impose limitations upon the size of a file.

File name
The name given to identify a collection of data or a program stored on disc or tape. The full CP/M file name is in the format:

d:filename.ext

where "d:" is the logical disc drive identifier; that is, the name assigned to the physical disc drive on which the disc containing the file is present (note that this will change whenever the disc concerned is placed in another drive);

"filename" is the primary file name composed of any combination of between 1 and 8 of the standard ASCII characters other than ".", "?", ":", and "*";

".ext" is the extension to the file name, composed of an initial "full-stop" separator and any combination of up to three of the same characters acceptable in a primary file name. The extension is sometimes also called the secondary file name or file type..

Filename match
Used to describe an abbreviation for a group of file names in which one or more characters may be used to match a class or type of file. (These characters are also referred to as 'wild cards'). Filename match is sometimes referred to as an ambiguous filename.

Front Panel
Method by which the contents of the 380Z's memory can be examined and modified, and programs executed one instruction at a time. Mainly used in debugging machine code or assembly language programs.

Graphics
The facility permitting a computer program to draw diagrams and produce images.

Graphics board
A circuit board known as HRG board (High Resolution graphics board) inside the computer that enables the use of graphics.

Hardware
The physical items of equipment making up a computer configuration.

High-level language
A language designed for a specific purpose (for example, BASIC, FORTRAN and COBOL) and which is much closer to English, and therefore easier to use, than machine code or assembly language.

High-resolution graphics (HRG)
Graphics capable of displaying fine lines; that is, 250 or more horizontal picture points (pixels).

Interface
The necessary hardware and/or software to form a working connection between two systems or parts of a system (for example, the central processor and the printer).

Interpreter
A program that translates and executes another program (written in a high-level language) one instruction at a time.

Kilobyte (K)
A unit of quantity consisting of 1024 bytes. It is often used to indicate the size of the memory of a computer (for example, 8K of memory is 8192 memory locations), or the amount of storage space on a disc. When used in conjunction with system software (for example, an 8K BASIC Interpreter), the term refers to the amount of computer memory the software will occupy.

Listing
A display of the contents of a file on the screen or via a printer. (Also known as a printout.)

Logged-on disc
A disc unit is logged onto CP/M by typing a command line consisting only of the logical disc drive name identifier (A, B, C, or D) and a colon. For example, the command "B:" logs drive B into the system as the current logical disc drive. The drive name for the current (logged-on) logical disc drive is used as the CP/M command prompt (B>). Note that any file specification that does not include a drive name identifier is assumed by CP/M to refer to a file on the current logical disc drive.

Logical disc drive name
Name used by CP/M to identify the physical disc drives.

Mini Floppy Disc
See "Disc"

Monitor (TV)
A monitor television screen used to display output from a computer.

Network (local area)
A group of microcomputers used as stations linked together in a network by a single cable and using the disc storage and printing facilties of a 'server' micro computer system.

Null
Null is ASCII code 0. It is a "do nothing" command usually given to provide a time delay for a process to be completed.

Operating system (see also CP/M)
A control program that provides an overall means of communication between the user and the processor, and the processor and the various peripheral components that make up the computer configuration.

 Copyright November 1982

Patch
A group of instructions inserted to provide an extra facility or to correct an error in a program.

PIP
The CP/M Peripheral Interchange Program, used mainly for copying files from disc to disc, and for listing them on the printer or monitor screen.

Ports
A term used to describe the physical points at which data gains access to, or exits from, the processor unit.

Printer
A machine that produces printed output (printout) from the computer.

Printout
See "Listing"

Program
A complete set of programming language statements that will perform a specified task.

Programming language
A code (with a limited vocabulary of key words and well-defined syntax rules) that allows the user to communicate with a computer and instruct it to perform logical tasks.

Prompt
An indication on the screen that the computer is ready for you to input a command. Different programs may use different prompts.

Random access memory (RAM)
The memory of a computer that is capable of holding the user's program and data. The contents of this kind of memory are often "volatile"; that is, they are lost when the computer is switched off.

Read only memory (ROM)
Computer memory that is non-volatile; that is, its contents are not lost when the computer is switched off. COS is held in ROM so that it is available as soon as the computer is switched on. The contents of ROM cannot be altered by program instructions.

Restart Address
The memory address to which execution can be transferred in order to restart a program without losing the data on which it is operating.

Save
The transfer of a program or data from immediate (and usually volatile) memory to a backing store of non-volatile memory (usually disc or tape).

Scroll
To produce a moving display of characters on a screen with new lines appearing from the bottom as existing lines disappear "off" the top of the screen.

Sector
Area of storage on a disc, often 128 bytes in length.

Server
A 380Z disc system used to control a local area network of 480Z network stations.

Software
A term used to refer to programs in general.

Source code
A text file containing a program in its source language (human readable) form. It is the input for a programming language compiler, interpreter, or assembler.

Statement
In programming, a "statement" is synonymous with an "instruction".

Text editor
A piece of software that is used to create, modify or delete text that is stored in a file. The text may be the source code for a computer program, or it may be a letter or report.

TPA Transient Program Area
The region of the 380Z memory (RAM) where a user's program and the system utilities are loaded for execution. It starts at address 100H and extends up to the locations holding the BDOS routines.

Track
Area of storage on disc.(For example, the mini-floppy (5.25-inch) discs used with the 380Z store data on 40 concentric rings, or tracks, on each side of the disc. The 8" disc has 77 tracks on each side.

User memory
The immediate computer memory available to the user; that is, the random access memory in the computer that is not used by the operating system or other essential items of system software.

Visual display unit (VDU)
A display device, incorporating a cathode ray tube as used in the domestic television set, on which information is displayed. The term is often used to include the keyboard through which the information that the screen displays is first sent to the computer.

Word processor
Either the complete computer hardware configuration that is packaged together to provide a computerized aid to text preparation and manipulation (generally comprising a software package, and the CPU screen, keyboard, discs, and a letter-quality printer); or just the software (for example, WordStar).

Wrap-around

The process by which a word processing system will automatically insert a "carriage return" at the end of each line that is input to the screen. Typing then continues from the left-hand edge of the next line. The operator does not have to worry about inserting the carriage returns, and can therefore increase typing speed substantially.

 Copyright November 1982

APPENDIX C

COPYING CP/M ON A SINGLE DRIVE SYSTEM

It is common practice to keep a copy of the CP/M operating system on all of your discs (but refer to your CP/M Licence Agreement). You can then start or restart the system using any disc. For single drive systems, two CP/M utility programs must be used consecutively (MOVCPM and SYSGEN) to place a copy of the operating system onto another disc. FASTCOPY and COPYSYS can be used for the same purpose on dual-drive systems).

If you have an old disc that contains an earlier version of CP/M, or a version that has been configured for a smaller system, MOVCPM AND SYSGEN will overwrite the old system files without destroying any of the other files on that disc.

To put a copy of CP/M onto another disc, turn on the system, insert a system disc into drive A, and load CP/M. Enter:

MOVCPM * * [RETURN]

Note: It is essential that you enter:

MOVCPM [SPACE] * [SPACE] * [RETURN]

The system then displays the message:

```
CONSTRUCTING nnK CP/M vers 2.2
READY FOR "SYSGEN" OR
"SAVE 36 CPMnn.COM"
A>
```

where nn is the size of your machine.

Now enter: SYSGEN [RETURN]

The system will display the message:

```
Sysgen
for CP/M 2.2 on MDS
(For single sided disks).

SOURCE DRIVE (or return to skip)
```

Enter: [RETURN]

The system now displays the message:

DESTINATION DRIVE (OR RETURN TO BOOT)

Replace the existing system disc with the disc to receive CP/M and enter:

A

The system displays the message:

 Copyright November 1982

DESTINATION ON A, THEN TYPE RETURN

Enter: RETURN

The system displays:

```
FUNCTION COMPLETE

DESTINATION DRIVE (OR RETURN TO BOOT)
```

The new disc now contains a complete copy of CP/M, but none of the utility programs. If required, replace the original disc. Enter RETURN to terminate execution of SYSGEN and return control to the copy of CP/M on the disc in drive A.

ERROR RECOVERY

Use MOVCPM and SYSGEN with care. Failure to enter the correct arguments (* *) for MOVCPM may not produce an error message, but will probably cause either an invalid copy of CP/M, or no copy at all, to be sent to the new disc. The correct MOVCPM command:

MOVCPM * * RETURN

(MOVCPM SPACE * SPACE * RETURN)

will ensure that the current version of CP/M matches the size of your 380Z in use and prepares and holds a copy of CP/M in memory ready to be written to the new disc by SYSGEN. If there is absolutely no doubt that the CP/M version on the source disc is exactly the same as the version required for the destination disc, you may omit MOVCPM and copy the system with SYSGEN alone.

If the system displays the message:

```
CONSTRUCTING nnK CP/M vers 2.2
nnK CP/M vers 2.2C
```

or: INVALID MEMORY SIZE

or the standard CP/M error message, then you have made a typing error in either the program name or the arguments. Re-enter:

MOVCPM * * RETURN

If there is no copy of MOVCPM on your current disc, the system will display the standard CP/M error message. Use the DIR command to check the presence of the MOVCPM.COM file.

If the message:

SYNCHRONIZATION ERROR

appears, you are probably using an incorrect version of the MOVCPM program for your machine (possibly intended for a different machine - you may be in contravention of your licence agreement). You must use the copy of MOVCPM

available on the distribution disc supplied by Research Machines Limited. It is most important that you enter RETURN following the first SYSGEN prompt - "Source drive (or return to skip)".

If you enter a valid drive name (either A or C), SYSGEN will ignore the copy of CP/M prepared by MOVCPM and will take a copy from the specified drive. If the drive name you entered is C, there may well be no CP/M resident on that disc at all. If there is no CP/M, but the disc has been formatted, the system will display the error message:

```
Failed to load CCP.SYS
```

This will cause the system to exit from both SYSGEN and CP/M, and will return control to the COS command level. CP/M will then again need to be loaded. If the disc has not yet been formatted, the system will display the error message:

```
Disc Err On C: Bad Sector
```

If this happens, enter CTRL/C, format the disc and start again.

If you enter a drive name that is recognized by CP/M, but is non-existent on a single-drive system (either B or D), SYSGEN will attempt to continue, but will fail in the write process and produce the error message:

```
Disc Err On B: Bad Sector
```

If this happens, enter CTRL/C and start again.

If you enter a drive name that is not recognized by CP/M (anything other than A, B, C, or D), the system will display the error message:

```
Invalid disk use A, or B ?
```

Ignore these options and enter:

RETURN

in response to the original prompt.

APPENDIX D

COPYING DISCS AND FILES ON A SINGLE DRIVE SYSTEM

COPYING A COMPLETE DISC (CPYDSK PROGRAM)

The CPYDSK program copies a complete side of a disc onto another complete disc side using a single disc drive. Copying of either double-sided or single-sided discs is permitted according to the type of equipment and discs being used. If you wish to copy one side of a double-sided disc onto its other side on a single drive 380Z, use the FASTCOPY program described in Chapter 6.

CPYDSK alternately reads from the source disc surface and writes onto the output disc surface. Be sure to insert the correct disc after each prompt otherwise the copying operation will not be successful and the contents of the disc inserted in place of the correct output disc will probably be lost.

Note that the use of the CPYDSK program will cause any information previously on the output disc side to be overwritten.

To copy a complete side of a disc onto another disc, first switch on the system and insert a system disc. Load CP/M. When the CP/M command prompt appears, enter:

CPYDSK [RETURN]

This will load the CPYDSK program. The screen will now display the message:

SOURCE DISK (A/C):

Enter: A [RETURN]

if the side to be copied from is in drive A, or:

C [RETURN]

if you are using a double-sided disc, and the side to be copied from is in drive C. The screen will now ask you for the disc drive containing the side to be copied to:

DESTINATION DISK (A/C):

Enter: A [RETURN]

if the side to be copied to is in drive A, or:

C [RETURN]

if you are using a double-sided disc and the side to be copied to is in drive C. CPYDSK will now display:

INSERT MASTER DISK, TYPE RETURN:

 Copyright November 1982

Insert the disc containing the side to be copied from (unless it is already present and enter:

RETURN

The CPYDSK program will begin execution, and will soon display the message:

INSERT NEW DISK, TYPE RETURN:

Remove the source disc and replace it with the destination disc (unless it is aready present). Then enter:

RETURN

The program will continue execution, and will soon display the message:

INSERT MASTER DISK, TYPE RETURN:

Now repeat the previous steps until the program displays the message:

COPY COMPLETE

followed by : SOURCE DISK (A/C):

You may now copy another disc. To exit from CPYDSK, enter CTRL/F followed by CTRL/C. This returns you to the CP/M level prompt (A>).

COPYING A FILE (CPYFIL Program)

The CPYFIL program copies a single file from one disc side to another (previously formatted) disc side using a single disc drive. You are prompted whenever it is necessary to exchange discs. The source and destination disc sides must be on the same surface of the input and output discs:

Copying is only possible from drive A to drive A or from drive C to drive C. The output disc is checked for the presence of a file with the same name. You are prompted for the decision whether to overwrite this file or abandon the copying operation.

To copy an individual file (for example, MYPROG.BAS) from one disc to another, first turn on the system and insert a system disc. Load CP/M. When the CP/M command prompt appears, enter:

CPYFIL RETURN

This will load the CPYFIL program. The screen will now display the message:

SINGLE DISK FILE COPY V 3.1 A
Copyright (c) 1981 by Research Machines

followed by the prompt "*". Now enter the name of the file:

MYPROG.BAS RETURN

The CPYFIL program will begin execution, and will display the message:

```
Insert master disk, type RETURN:
```

Replace the system disc with the source disc (if not already present) and enter:

RETURN

The CPYFIL program will continue execution, and will display the message:

```
Insert new disk, type RETURN:
```

Remove the source disc and replace it with the destination disc. Then enter:

RETURN

The program will continue execution, and if the file is a large one, it may again display the message:

```
Insert master disk, type RETURN:
```

Repeat the above process until the screen displays the message:

```
Copy complete
*
```

You may now either enter another file name and press the RETURN key to copy a second file, or replace the system disc and press CTRL/C to return to CP/M.

The CPYFIL program will only copy from side A of the source disc to side A of the destination disc, or from side C of the source disc to side C of the destination disc.

CPYFIL versions before 3.1A can only copy files to and from discs in drive A. If you wish to copy a file that is on side C of a disc, you must first use PIP to copy it from side C to side A.

ERROR RECOVERY

If the file you are copying already exists on the destination disc, the screen will display the message:

```
File exists - replace (Y/N)
```

Enter "Y" to replace the existing file, or "N" to return to the CPYFIL prompt.

If you type anything other than a valid file name in reply to the CPYFIL prompt, then the following message will appear:

```
Invalid file specification
Please supply a file name
in the form FILE.EXT
*
```

 Copyright November 1982

The rules governing the creation of file names are given in chapter 5.

If the file name you specify is not present in the directory of the source disc, the screen will display:

```
File Not Found
*
```

 Copyright November 1982

APPENDIX E

USE OF A TELEVISION AS THE SYSTEM DISPLAY

A 40-character 380Z system can use a TV receiver as its display instead of a monitor. If your 380Z is a 40/80 (Varitext) system, make sure it contains the interface needed to allow a 625-line UHF television set to be used in place of a monitor.

Due to the narrow bandwidth of television sets, you are unlikely to obtain satisfactory results when a 40/80 character system is used in 80-character mode.

Connecting Up

To connect a television to the central processor you need a 75-ohm coaxial cable with a male TV plug at each end.

- Push one end of the coaxial cable onto the appropriate socket marked TV on the rear of the central processor
- Push the other end into the aerial socket of the television set.

Tuning In

To tune the set, switch on the processor and the television, press the reset button and type W to enter 40-character mode. On the television, set the volume control to its minimum and adjust the tuning control until the COS message:

```
COS 4.0/M
→ W
→
```

is clearly visible.

The 380Z TV interface transmits its signals on a number of UHF channels. Choose a channel that gives the best reception. Local TV transmitters may interfere with the video signal if you choose a channel close to a channel used for broadcasting. You should therefore determine by trial and error, over the whole tuning range of your TV set, which frequency offers the best reception and make a note of this frequency for future use.

 Copyright November 1982

APPENDIX F

40-CHARACTER SYSTEMS : DIFFERENCES

This appendix indicates the areas of difference between a 40/80 system and the older, 40-character only system.

The differences are the:

- Ability to use a cassette recorder for backing store
- Ability to use a television as the display at all times
- Character set and display handling facilities provided by firmware

These differences are described below.

Use of Cassette Recorder

On 40-character systems only, it is possible to attach a cassette recorder for use as backing store or for file transfer to cassette-based systems.

The details are given in the 380Z Disc System Information File.

Use of Television

On a 40-character system, it is possible to use a television in place of the video monitor. It may be either black and white or colour but must be a 625-line UHF set. Follow the instructions in Appendix E, but omit the W command which has no function in 40-character systems.

Character Set and Display Handling Facilities

The display handling of the 40-character system is less sophisticated than that of the Varitext system in that dimming and underlining of characters is not possible and user-definable characters are not available.

Moreover, the characters displayed on the screen are different in some cases. Appendix G gives the complete character set for the VDU.

 Copyright November 1982

The table below shows those cases where the character displayed on the screen is different from that shown on the standard keyboard.

	Keyboard	Display
Normal Characters	^	↑
	\	½
	[	←
	_	#
	]	→
Shift characters	~	÷
	|	¦
	{	¼
	£	#
	}	¾

 Copyright November 1982

APPENDIX G

380Z MONITOR CHARACTER SETS

40-CHARACTER SYSTEMS

Character codes 0 - 127 are defined by a standard ROM, shown in Figure G.1. There are a number of differences from standard ASCII. Codes 128-255 are low resolution graphics in two intensities.

80-CHARACTER SYSTEMS

The characters are the same in 40- and 80-character modes (apart from their width).

Character codes 32-127 have their standard ASCII representations, with # as 23H and $ as 24H.

Codes 128-255 are initialized to be the low resolution graphics characters as for 40-character systems, but can be redefined by an 'escape sequence'.

Codes 0-31 are miscellaneous characters which can only be output to the screen via an escape sequence (described in the Firmware Reference Manual). They do not in general correspond with the representations of the same codes in the 40-character systems, but they do include some of the characters.

 Copyright November 1982

40-Character System Display

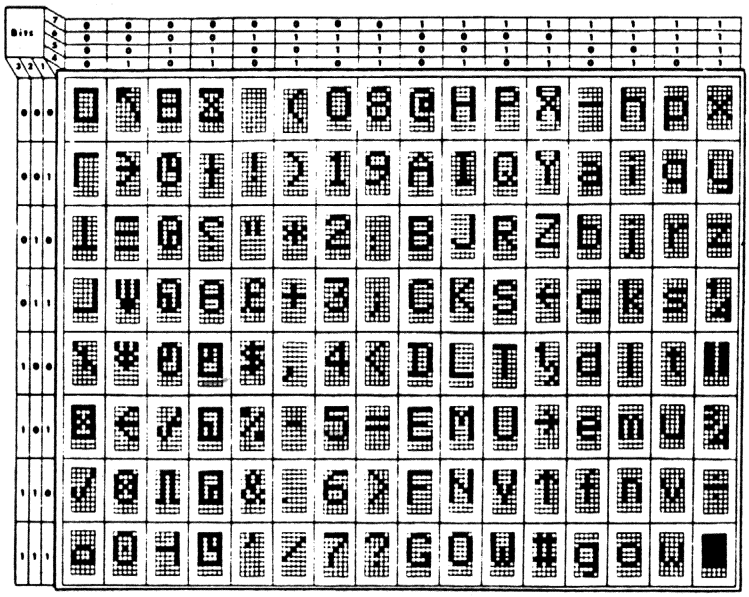

80-Character System Display

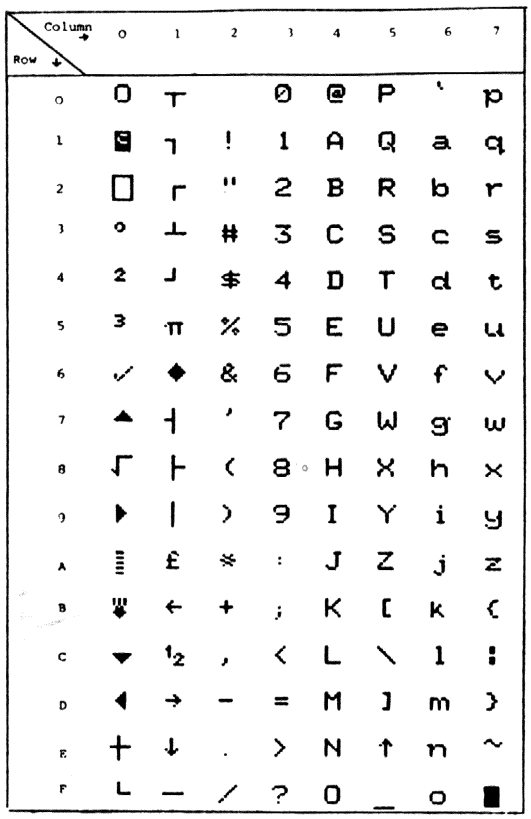

Figure G.1 Display Character Sets

APPENDIX H

EARLIER KEYBOARD LAYOUTS

Versions of the 380Z Disc System sold before 1 September 1980 were delivered with a keyboard that is slightly different to the current keyboard. The differences are:

- two extra control keys, located on the top and bottom right-hand corners of the keyboard (where the dummy keys on the present keyboard are located) and labelled US/SI and FS/FF
- the underline (_) and the DELT keys were combined on the same key, located in the same position as the underline key on the existing keyboard, and labelled DELT/_
- an extra control key located in the same position as the present DELT key and labelled BREAK

The extra control keys perform no useful functions when the system is operating under either COS or CP/M.

Deletion of previously-entered characters is achieved by pressing DELT and SHIFT together; pressing DELT alone displays the # symbol (not the underline symbol).

On some of these earlier keyboards, the ESC key was labelled ALT MODE. With some of the very first versions of these keyboards, pressing this key does not transmit the same code as pressing the ESC key on the current keyboard - this difference is important if you intend to use TXED (the Text Editor program) (for further information please refer to Appendix D of the Research Machines publication: TXED Reference Manual, PN 11059).

 Copyright November 1982

APPENDIX I

SUMMARY OF MAIN DIFFERENCES BETWEEN CP/M 2.2 RELEASE 1 AND CP/M 1.4

This appendix describes the main differences between the previous and current version of CP/M.

Functions

CP/M 2.2 provides additional functions, the most significant of which make it easier for programs to perform random access to files.

Note that the implementation of these functions in assembler and machine-languge programs is described in the Digital Research publication:

CP/M Interface Guide (Version 2.2), PN 11092.

This publication is available from Research Machines.

BASIC Version Supported

CP/M 2.2 supports the use of Extended BASIC version 5.0G and any later version. Earlier versions of BASIC are not supported. (Version 5.0G or later can also be used with CP/M 1.4). Upgrades to earlier versions are available from Research Machines.

TXED Version Supported

CP/M 2.2 supports the use of TXED version 4.2E or later. Earlier versions of TXED are not supported. (Versions 4.2E or later can also be used with CP/M 1.4). Upgrades to earlier versions are available from Research Machines.

File Attributes

In CP/M 2.2, each file is given attributes that affect whether the file can be modified or not and whether its name will or will not appear in a directory listing. These attributes are called the access attribute and the disclosure attribute.

A file can have its attributes altered by using STAT. For example:

STAT filename $R/O [RETURN]

sets the access attribute to the read-only state.

STAT filename $R/W [RETURN]

restores the access attribute to the default read/write state.

STAT filename $SYS [RETURN]

sets the disclosure attribute to SYS so that the file is not listed by the DIR function.

STAT filename $DIR [RETURN]

 Copyright November 1982

sets file disclosure attribute to DIR so that the file is listed by the DIR function. This is the default setting.

The display given by

STAT *.* RETURN

shows the access and disclosure attributes of each file. Files that have the disclosure attribute SYS appear with their names in brackets.

User Numbers

CP/M 2.2 assigns to each file an associated user number, in the range 0 to 15. Normally, it is only possible to access a file in stand-alone system use when your user number corresponds with the user number assigned to the file. (When using the system as a network and running with MP/M II, there is one important exception to allow all network station users to access system software files: files stored with user number 0, the SYS attribute, and the R/O (read-only) attribute can be accessed from any user number.) The use of user numbers is not recommended for stand-alone system use although it may be necessary from time to time for network managers in order to perform file copying and deletion for different user numbers.

When the system is first loaded, the user number is 0. The command:

USER n RETURN

sets the current user number to "n" where "n" can be a number in the range 0 to 15.

To copy files from one user number to another, use PIP. The new file will have the current user number. The user number of the source file is specified as [Gn] after the file name.

Thus,

PIP A:=FRED.BAS[G2] RETURN

makes a copy under the current user number of the file FRED.BAS from user number 2 on drive A.

Note that to do this you must have a copy of PIP.COM under the current user number. An alternative method that does not require an additional copy of PIP.COM is shown below:

USER 0 RETURN

PIP RETURN

to load PIP.COM into the TPA

RETURN

to terminate execution of PIP

USER n RETURN

to change to user number n

SAVE 0 G.COM [RETURN]

to save a dummy .COM file under the desired user number.

G [RETURN]

to restart PIP running under the chosen user number.

Note that the G command will restart the last program loaded into the TPA, in this case the PIP utility.

To determine the current user number, enter:

STAT USR: [RETURN]

Utility Programs

Additional utility programs are supplied on the system disc.

COPYSYS - copies the operating system and selected utilities onto a new disc, optionally formatting it first.

FASTCOPY - fast disc image copy program, optionally combined with formatting.

These utilities are described in detail below, and in Chapter 6.

The following are no longer provided on the system disc:

DUMP.COM
DUMP.ZSM
HELP
S1INP.HEX
S2INPA.HEX
S4INP.HEX
TSTSYS.COM

RS232 Serial Interface Support

Support for the SI04 (RS232 Serial Interface) as an input device (previously provided by the S4INP.HEX patch to PIP) is now provided by the operating system through the symbolic device name "RDR:"

Before use, the SI04 interface must be initialized either by issuing the command: "EMT SETLST" from a Machine Code program or by calling the COS select printer option "O". It is possible to configure a system disc with 'CONFIG' in order to select the printer option for the SI04 interface automatically whenever the system is loaded.

Note that after initializing the SI04 interface, it is possible to select another printer option. RDR: will remain initialized and may be used. For example, switch on and follow the procedure below:

COS .....

> [O]

printer type (0-6): [4]

Baud code (0-6): [1]

This initializes the SI04 interface at 300 baud as device RDR:. It is then possible to select an alternative printer with, for example, the Centronics interface through the socket "USER PORT", following the procedure:

Enter: [O]

Printer option (0-6) [3]

Operating System Size

CP/M 2.2 is larger than CP/M 1.4 by 1K bytes. As this system will not fit on the three reserved tracks on a 5.25-inch disc, the Console Command Processor (CCP) component of CP/M is held as a file in the normal filing area. It is called CCP.SYS and occupies 2K bytes of the file area, leaving 70K bytes for user files. It is assigned to user number 15 and has its attributes set to SYS and R/O.

Configurations

CP/M 2.2 is configured to work only with COS 3.4, COS 4.0, and any later versions of 380Z firmware.

Compatibility with CP/M 1.4

Programs that run under CP/M 1.4 should run under CP/M 2.2. However, any programs making direct use of non-standard entry point addresses in CP/M rather than the standard BDOS entry point at address 5H probably will not run.

Note that CP/M 1.4 versions of PIP and STAT do not work correctly on CP/M 2.2.

CP/M 2.2 files are compatible with CP/M 1.4 if they are assigned to user 0 and have their attributes set to DIR and R/W.

COPYING CP/M WITH COPYSYS

COPYSYS is a new facility for use on a dual-drive system. It is designed both to help the novice user and to be a convenience to the experienced user by performing automatically many of the various CP/M functions associated with preparing a new disc. It will optionally format a new disc (or re-format an old disc), create a system to suit the memory size of your machine, and copy the CP/M operating system, PIP, STAT, FASTCOPY and FORMAT onto the new disc.

COPYSYS works by chaining together several CP/M utilities. It uses FORMAT (optionally) to format the disc in drive B; the command MOVCPM * * to create a CP/M system configured to the size of the machine being used; it uses SYSGEN to transfer this CP/M system to the disc in drive B; and, finally, it uses a series of PIP commands to transfer four commonly required utilities to the disc in drive B. COPYSYS is described in chapter 6.

COPYING A COMPLETE DISC WITH FASTCOPY

FASTCOPY is a utility designed to make the process of producing a complete copy of a disc as quick and simple as possible. It is particularly useful for producing a backup disc at the end of each day's work. It is a screen-driven, disc-to-disc, image-copying program.

FASTCOPY can be used on both 5.25-inch and 8-inch disc systems; it will run under COS 3.4 and COS 4.0 operating systems. It cannot be run on a network system from a network station. (It can be run on a network server using CP/M 2.2 in stand-alone mode.)

FASTCOPY will optionally format a disc, optionally perform double-sided copying (for example, disc A to disc B, and disc C to disc D), and perform disc condition checks to ensure the likely success of the operation. FASTCOPY is described in chapter 6.

 Copyright November 1982

APPENDIX J

USE OF HRG AS SYSTEM MEMORY

The HRG facility, if present, can be used as an additional 16K bytes of system memory provided that:

- the 380Z has 31K of memory (neither more nor less)
- the 380Z contains the HRG board
- an operating system for a 47K system is available.

High resolution graphics cannot be used when the HRG facility is being used as system memory.

How to Create a 47K Operating System

To create an operating system that uses 47K of main memory on a 31K system with HRG, follow these steps:

1. Press RESET
   Insert a system disc containing COPYSYS in drive A.
2. Press the key M
3. Press the key B
4. Run the COPYSYS program (see chapter 6).

The system disc produced can now be used to run programs that require a total memory size greater than 31K provided that the HRG facility is enabled as memory when the 380Z is switched on or reset. Do this by using the COS command M followed by B (to enable HRG as memory and to load the operating system).

Note that in the previous release of CP/M, the utility program CONFIG was used to reconfigure the operating system to use the HRG facility as additional memory. This is no longer possible in this release of CP/M.

 Copyright November 1982

APPENDIX K

AVAILABLE SOFTWARE IN CP/M 2.2

The following items of software are included on the CP/M 2.2 Distribution Disc.

File name	Purpose
FORMAT.COM	Format a new disc
MOVCPM.COM	Create a version of CP/M to match a given memory size
SYSGEN.COM	Copy CP/M onto a disc
PIP.COM	Copy disc files
STAT.COM	Display status of a disc or a file, modify its attributes
COPYSYS.COM	Copy operating system, STAT, FORMAT, FASTCOPY, and PIP
CPYDSK.COM	Copy a complete disc (single-disc system)
CPYFIL.COM	Copy a file (single disc system)
FASTCOPY.COM	Copy entire contents of disc (twin-disc system)
CONFIG.COM	Configure a version of CP/M to meet given requirements
FILEX.COM	Disc to cassette text file transfer
SCASS.COM	Slow cassette input for systems with COS 3.4 only
LOAD.COM	Load a file in INTEL HEX machine code and produce a command file
DDT.COM	Dynamically debug a program
SUBMIT.COM	Submit a file of commands for Batch Processing
XSUB.COM	Used with SUBMIT.COM. Permits parameter passing from a command file to programs involved by it.
VERIFY.COM	Check the read/write status of a complete disc
FDOC MDOC	Check the read/write status of individual sections of a disc and/or patch a disc
RELEASE.TXT	Release note

Additional information on CP/M and the standard CP/M utilities (MOVCPM, SYSGEN, PIP, LOAD, DDT, SUBMIT) can be found in the CP/M Operating System

 Copyright November 1982

Manual published by Digital Research.

Applications Software

The following major items of applications software are examples of those available from Research Machines Ltd. When ordering software for use with your system please specify whether it is for a 5.25-inch (MDS) system or for an 8-inch (FDS) system and give the basic monitor version number (e.g. COS 4.0). Before using an item of applications software make sure you are familiar with the basic operations of your 380Z Disc System as explained in this User Guide.

Research Machines Extended BASIC

Fast, general purpose BASIC interpreter with 7-digit floating-point arithmetic, string-handling functions, graphics output, sequential file handling, and line editing.

Documentation: Research machines Extended Basic Version 5 for Disc System and Network Station Users, PN 11006.

If you are using the high resolution graphics option then you will also need: Research Machines High Resolution Graphics Level 2, PN 11034.

If you are using the high resolution colour graphics option you will need in addition: Research Machines RGB Converter Board Operating Manual.

Research Machines TXED - Interactive Text Editor and Formatter

A powerful character-oriented text editor comparable to those available on large computer systems. TXED can operate in either immediate mode, in which editing is carried out directly on the screen, or in command mode, in which editing is carried out by the system working through a stored sequence of commands. The system can be provided with a formatter to generate and output formatted text to a printer.

If you plan to use the ZASM Assembler, Microsoft FORTRAN 80, RML ALGOL 60 or CIS COBOL then you must use the TXED Text Editor to input and maintain your files of source programs.

Documentation: Research Machines TXED Text Editor and Formatter

Research Machines ZASM Z80 Assembler

An assembler using Zilog mnemonics and producing object code in industry standard INTEL HEX format.

Documentation: Research Machines ZASM-Z80 Assembler, PN 11066

You will also need a definition of the Zilog Assembly Language, available from Research Machines.

Z80 Programming Manual V2.0 published by MOSTEK.

 Copyright November 1982

Microsoft FORTRAN 80

A FORTRAN compiler for a dialect of FORTRAN close to standard FORTRAN 66 (ANSI document X 3.9-1966) which outputs 8080 object code which can then be linked using the Microsoft L80 Linker to incorporate segments from a system library and segments output by the Microsoft M80 Macro Assembler. The system provides a comprehensive range of sequential and random file handling facilities.

Documentation: Research Machines FORTRAN 80 Reference Manual, PN 11084

If you are using Research Machines FORTRAN with high resolution graphics you will also need: Research Machines High Resolution Graphics - Reference Manual, PN 11034

and if you are also using colour graphics: Research Machines 363-222 RGB Converter Board Operating Manual

CBASIC

A BASIC compiler that was designed to meet the needs of Data Processing systems development. The language provides many extensions to normal BASIC including: long variable names, 14 digit BCD arithmetic, string arrays and string processing functions, WHILE...WEND and IF...THEN...ELSE constructs, formatted printing (PRINT USING), sequential and random access file processing (with variable length records) and a source language library facility.

Documentation: CBASIC, A Reference Manual - Digital Research Inc.

Research Machines ALGOL 60

An ALGOL 60 compiler designed specially for use on small computers. Almost all the features of ALGOL 60 are implemented together with a number of extensions, in particular type BYTE ARRAY, string-handling functions and direct disc input/output.

Documentation: Research Machines ALGOL 60-Reference Manual, PN 11071

If you are using ALGOL 60 with high resolution graphics you will also need a copy of: Research Machines High Resolution Graphics-Reference Manual, PN 11034

and if you are also using colour graphics: Research Machines 363-222 RGB Converter Board Operating Manual

CIS COBOL

A COBOL compiler designed specially for use on small computers. Two versions of the compiler are available: standard ANSI COBOL (ANSI X3.23 1974) with some extensions and "compact" COBOL. The system also provides, as an option, a powerful utility program called FORMS which allows the user

to define screen layouts for use by COBOL programs and which automatically generates programs to maintain files with the "form data" in them.

Documentation: CIS COBOL-Language Reference Manual Version 4, Micro Focus Inc. CIS COBOL-Operating Guide Version 4, Micro Focus Inc.

and if you are using the FORMS Utility Program: CIS COBOL FORMS Utility Manual, Micro Focus Inc.

For information on the many other items of applications software available from Research Machines please contact:

The Sales Office,
Research Machines Ltd.,
PO Box 75,
Oxford
OX2 0BW

Tel: 0865-249866

 Copyright November 1982

ASCII 2.4,G.1

BDOS error messages 6.15
bootstrap (operating system) 4.5

Character Sets 2.4,F.1,G.1
commands (CP/M) 5.4
configurations 2.2
copying a disc 6.9-6.14,D.1
copying CP/M 6.4-6.8,C.1
copying files 5.12-5.15,D.1
copying the operating system 6.4-6.8,C.1
COPYSYS utility 6.4-6.8
COS 2.1, 4.4
CP/M 1.4 (differences), I.1
CP/M copying 6.4,C.1
CP/M disc space 6.1
CP/M facilities 5.3
CPYDSK utility D.1
CPYFIL utility D.2
current disc drive 5.5

deleting a file 5.7
directory (disc) 5.3,5.5-5.6
disc changing 6.1
disc copying 6.9-6.14,D.1
disc directory 5.3,5.5-5.6
disc formatting 6.2-6.4
disc handling 3.4
disc loading 3.4
disc names 3.2
disc operation 3.5
disc status 5.9
disc storage 3.1
disc systems 2.2
disc utilities 6.2,C.1,D.1
discs 3.1,6.1
displays 2.3
distribution disc 4.5
drive names 3.2

ERA command 5.7

FASTCOPY utility 6.9-6.14
file attributes 5.2, 5.11
file copying 5.12-5.15,D.1
file deletion 5.7
file display 5.9
file inspection 5.9
file names 5.1
file renaming 5.8
file status 5.9
files 5.1
firmware 2.1
FORMAT utility 6.2-6.4
formatting discs 6.2-6.4

graphics characters G.1

 Copyright November 1982

handling discs 3.4
hardware 1.1
HRG as memory J.1

installation A.1

keyboard 4.1
keyboards (earlier models) H.1

loading discs 3.4
logged-in disc/drive: see current disc drive
logical disc drive 3.2

Memory (extension through HRG) J.1
microcomputer 1.1
MOVCPM utility C.1

operating system 2.2,4.4,5.4
operating system copying 6.4-6.8,C.1
operating system loading 4.5

PIP command 5.12-5.15
program loading 5.15
program saving 5.7

REN command 5.8
renaming a file 5.8

SAVE command 5.7
scrolling 2.4
single-drive copying C.1,D.1
sockets (380Z) A.4
software 1.2,K.1
STAT command 5.9-5.12
switching-on 4.3
SYSGEN utility C.1

TV as display E.1
TYPE command 5.9

unpacking A.1
USER command 5.5

Varitext 2.4
VDU 2.3

write-protection 3.1

 Copyright November 1982

RESEARCH MACHINES

MICROCOMPUTER SYSTEMS